ANALYSIS OF THE LAMINATED COMPOSITE PLATE UNDER COMBINED LOADS

Zdravko Vnučec
Sveučilište Josipa Jurja Strossmayera u Osijeku
Strojarski fakultet u Slavonskom Brodu
Trg Ivane Brlić-Mažuranić 2, 35000 Slavonski Brod, Republika Hrvatska

Keywords: laminated composite material, elastic properties, plate, stress, strain

ABSTRACT:

In paper, the numerical analysis performed to predict the engineering properties of the multilayered plate and the stress-strain distributions for various lamination angles of continuous fiber composite laminate is described. The computations of the stress and strain values for the angle-ply four-layered symmetric laminated plate with various lamination angles $(\pm\alpha)_s$ *of laminas under combined loads are carried out. The analyzed laminate plates have been composed with unidirectional layers that were made from composite materials: the reinforcement fibers were E-glass, and as matrix material the epoxy resin were used. The engineering properties values of multilayered plate and several of the numerous results of the stress-strain distributions in the layers of the analyzed laminated plate subjected to known the force resultant* N_x *and bending moment resultant* M_x *graphically in diagrams are presented. The numerical results in this work were calculated by use of own made PC software that is prepared to analyzing of multilayered plate made from composite material.*

1. INTRODUCTION

Today, composite laminates have many applications as advanced engineering materials, primarily as components in aircrafts, power plants, civil engineering structures, ships, cars, rail vehicles, robots, prosthetic devices, sports equipment etc. The major advantage of composite material is ability of the controllability fiber alignment. By arranging layers and fiber direction, laminated material with required strength and stiffness properties to specific design conditions, can possibly be achieved [1]. The elastic and mechanical properties of composite material are not set until the final structure is manufactured. These properties could be obtained by means of standardized tests or with numerical methods [1, 2]. Because of the expenses and inconveniences in testing, it is more popular to make a numerical estimate of these properties.

In a laminate plate individual continuous fiber/matrix laminas are oriented in the required directions and bonded together. In paper, by using terms of the plane classical lamination theory and the stress-strain relationships [1, 3], the numerical arrangement of the stress and strain values for the angle-ply symmetric laminated plates for various lamination angles is carried out.

2. STRESS AND STRAIN ANALYSIS OF COMPOSITE LAYERED PLATE

The analyzed angle-ply symmetric layered composite plates have been made from four orthotropic laminas with equal thickness that had bonded together normal to their principal plane (L, T). In a symmetric laminate all layers above the midplane of the laminate (a plane of symmetry) have the same angle as the ply in the equivalent position below the midplane.

By using of the generalized Hooke's law in the principal material coordinates of an orthotropic lamina, Fig. 1.a, the stress-strain relationships for a composite material in linear elastic area can be written in shorthand matrix form as [1, 4]:

$$\{\boldsymbol{\sigma}\} = [\mathbf{C}]\{\boldsymbol{\varepsilon}\} \qquad \text{or in inverted form:} \quad \{\boldsymbol{\varepsilon}\} = [\mathbf{S}]\{\boldsymbol{\sigma}\}, \tag{1}$$

where $[\mathbf{C}]$ is the stiffness matrix and $[\mathbf{S}]$ is the compliance matrix of a lamina.

The engineering properties of an unidirectional lamina in the principal material coordinate axes (L, T), Fig. 1.a, are: E_L – the longitudinal modulus of elasticity in the L direction, E_T – the transverse modulus of elasticity in the T direction, G_{LT} – the shear modulus in (L, T)-plane, and ν_{LT} – the major Poisson's ratio.

The generalized Hooke's law for an orthotropic unidirectional lamina, Eq. (1), in the local lamina coordinate system (L, T), Fig. 1.a, can be written in expressed form as:

$$\varepsilon_L = \frac{1}{E_L}\sigma_L - \frac{\nu_{TL}}{E_T}\sigma_T\,, \quad \varepsilon_T = -\frac{\nu_{LT}}{E_L}\sigma_L + \frac{1}{E_T}\sigma_T\,, \quad \gamma_{LT} = \frac{1}{G_{LT}}\tau_{LT}\,, \quad \left(\frac{\nu_{LT}}{E_L} = \frac{\nu_{TL}}{E_T}\right) \tag{2}$$

For the case of the plane-stress state in orthotropic plate, hence $\sigma_z = \tau_{zT} = \tau_{zL} = 0$ the inverse form of the Hooke's law, Eq. (1) is used, where the components of the reduced stiffness matrix $[\mathbf{Q}]$ of a lamina are given by terms:

$$Q_{11} = \frac{E_L}{1-\nu_{LT}\nu_{TL}}\,, \; Q_{22} = \frac{E_T}{1-\nu_{LT}\nu_{TL}}\,, \; Q_{12} = Q_{21} = \frac{\nu_{LT}E_T}{1-\nu_{LT}\nu_{TL}} = \frac{\nu_{TL}E_L}{1-\nu_{LT}\nu_{TL}}\,, \; Q_{66} = G_{LT}\,. \tag{3}$$

For stress-strain analysis of a laminated composite plate, it is necessary to obtain the inverse form of the lamina stress-strain relationship of Eq. (1) in the lamina off-axis coordinate system (x,y), Fig. 1.a, which in short matrix form is:

$$\{\boldsymbol{\sigma}\}_{xy} = [\overline{\mathbf{Q}}]\{\boldsymbol{\varepsilon}\}_{xy}\,, \tag{4}$$

where the off-axis lamina stiffness matrix $[\overline{\mathbf{Q}}]$ in the laminate (x, y)-coordinate system and the second order transformation matrix $[\mathbf{T}]$, where are $\mathrm{m} = \cos\alpha$, $\mathrm{n} = \sin\alpha$, Fig. 1.a, are given as:

$$[\overline{\mathbf{Q}}] = [\mathbf{T}]^{-1}[\mathbf{Q}]\,[\mathbf{T}], \qquad [\mathbf{T}] = \begin{bmatrix} \mathrm{m}^2 & \mathrm{n}^2 & 2\mathrm{mn} \\ \mathrm{n}^2 & \mathrm{m}^2 & -2\mathrm{mn} \\ -\mathrm{mn} & \mathrm{mn} & (\mathrm{m}^2-\mathrm{n}^2) \end{bmatrix}. \tag{5}$$

The analysis of layered structures is based on the classical lamination theory [1, 2] and the orthotropic plate is analyzed with the coordinate system (x, y, z) on the middle surface of the plate ($z = 0$), Fig 1.b. The strains and curvatures on the middle surface of plate are in this case $\varepsilon_x^{\mathrm{o}}, \varepsilon_y^{\mathrm{o}}, \gamma_{xy}^{\mathrm{o}}, \kappa_x^{\mathrm{o}}, \kappa_y^{\mathrm{o}}, \kappa_{xy}^{\mathrm{o}}$.

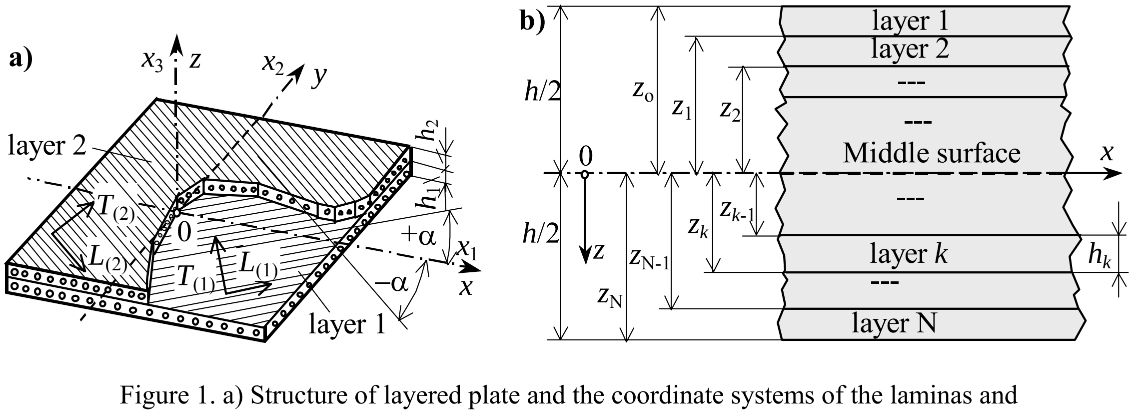

Figure 1. a) Structure of layered plate and the coordinate systems of the laminas and the layered plate, b) Laminated plate geometry and layer numbering system

In the classical lamination theory, the constitutive equation of a thin laminated plate can be written in partitioned matrix form as [3, 4]:

$$\begin{Bmatrix}\mathbf{N}\\ \mathbf{M}\end{Bmatrix}=\begin{bmatrix}\mathbf{A} & \mathbf{B}\\ \mathbf{B} & \mathbf{D}\end{bmatrix}\begin{Bmatrix}\boldsymbol{\varepsilon}^{\mathrm{o}}\\ \boldsymbol{\kappa}^{\mathrm{o}}\end{Bmatrix}\quad \text{(a)}\quad \text{or in inverted form: } \begin{Bmatrix}\boldsymbol{\varepsilon}^{\mathrm{o}}\\ \boldsymbol{\kappa}^{\mathrm{o}}\end{Bmatrix}=\begin{bmatrix}\mathbf{A} & \mathbf{B}\\ \mathbf{B} & \mathbf{D}\end{bmatrix}^{-1}\begin{Bmatrix}\mathbf{N}\\ \mathbf{M}\end{Bmatrix}\quad \text{(b)} \qquad (6)$$

where A_{ij} , B_{ij} and D_{ij} $(i,j=1,2,6)$ represent the extensional, coupling and bending components of the laminate stiffness matrices, respectively:

$$\left(A_{ij},B_{ij},D_{ij}\right)=\int_{-h/2}^{h/2}(\overline{Q}_{ij})_k\,(1,z,z^2)\,\mathrm{d}z\,. \qquad (7)$$

$[\mathbf{N}]$, $[\mathbf{M}]$, $\{\boldsymbol{\varepsilon}^{\mathrm{o}}\}$ and $\{\boldsymbol{\kappa}^{\mathrm{o}}\}$ are the matrices of the in-plane forces, moments, in-plane strains and curvatures of the midplane, Fig. 2.a, respectively.
The strains and stresses along arbitrary the laminate *x,y*-axes in the k^{th} lamina of the multi-layered plate, Fig 1.b, by the lamina stress-strain relationships of Eq. (6b), may be given as:

$$\{\boldsymbol{\varepsilon}\}_{xy}^{k}=\{\boldsymbol{\varepsilon}^{\mathrm{o}}\}+z\cdot\{\boldsymbol{\kappa}^{\mathrm{o}}\}\quad \text{(a)},\qquad \{\boldsymbol{\sigma}\}_{xy}^{k}=[\overline{\mathbf{Q}}]_k\{\boldsymbol{\varepsilon}\}_{xy}^{k}\quad \text{(b)}. \qquad (8)$$

In the composite laminated plate analysis by static equilibrium equations, the forces and moments resultants per unit length, in shorthand forms are given as:

$$\left(N_x,N_y,N_{xy}\right)=\int_{-h/2}^{h/2}\left(\sigma_x^k,\sigma_y^k,\tau_{xy}^k\right)\mathrm{d}z\quad \text{(a)},\qquad \left(M_x,M_y,M_{xy}\right)=\int_{-h/2}^{h/2}\left(\sigma_x^k,\sigma_y^k,\tau_{xy}^k\right)z\,\mathrm{d}z\quad \text{(b)}. \qquad (9)$$

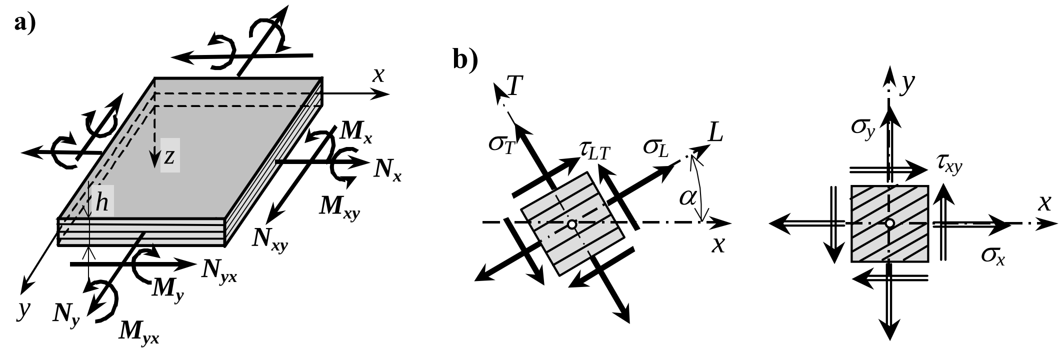

Figure 2. a) Definition of in-force and moment resultants for a plate, b) Stress components in lamina respect to the lamina principal (*L*, *T*)-axes and the laminated plate (*x*, *y*)-coordinate system

The strains and the stresses components in the k^{th} lamina along (*x*, *y*)-axes of the laminated plate can be transformed to the principal lamina (*L*, *T*)-axes by means of the lamina stress-strain relationships [4], Fig. 2.b, in matrix forms:

$$\{\boldsymbol{\varepsilon}\}_{LT}^{k}=[\mathbf{T}]_k\{\boldsymbol{\varepsilon}\}_{xy}^{k}\quad \text{(a)},\qquad \{\boldsymbol{\sigma}\}_{LT}^{k}=[\mathbf{T}]_k\{\boldsymbol{\sigma}\}_{xy}^{k}\quad \text{(b)}. \qquad (10)$$

A symmetric laminate has both geometric and material property symmetry about the middle surface ($z = 0$), Fig. 1.b; and components $A_{16} = A_{26} = 0$ and all components $B_{ij} = 0$. For case a balanced symmetric laminate under in-plane force loads are all moments $\boldsymbol{M}_i = 0$ and curvature of the midplane $\boldsymbol{\kappa}^{\boldsymbol{o}} = 0$.
In the engineering structures, a symmetric layered plate will be manufactured in the form a laminate that is consisting from the several orthotropic layers, which are oriented in the required directions (± α) and perfectly bonded together under high pressure and increase temperature, Fig. 1.a. The effective engineering properties of a symmetric laminate are defined in the principal laminated plate (*x*, *y*)-coordinate system, Fig. 3, by using the components of the laminate extensional stiffness matrix of Eq. (7) as follows [1]:

$$E_x = \frac{\sigma_x}{\varepsilon_x^{\text{o}}} = \frac{A_{11}A_{22} - A_{12}^2}{A_{22}h}, \quad E_y = \frac{\sigma_y}{\varepsilon_y^{\text{o}}} = \frac{A_{11}A_{22} - A_{12}^2}{A_{11}h}, \quad G_{xy} = \frac{\tau_{xy}}{\gamma_{xy}^{\text{o}}} = \frac{A_{66}}{h}, \quad \nu_{xy} = \frac{A_{12}}{A_{22}}. \qquad (11)$$

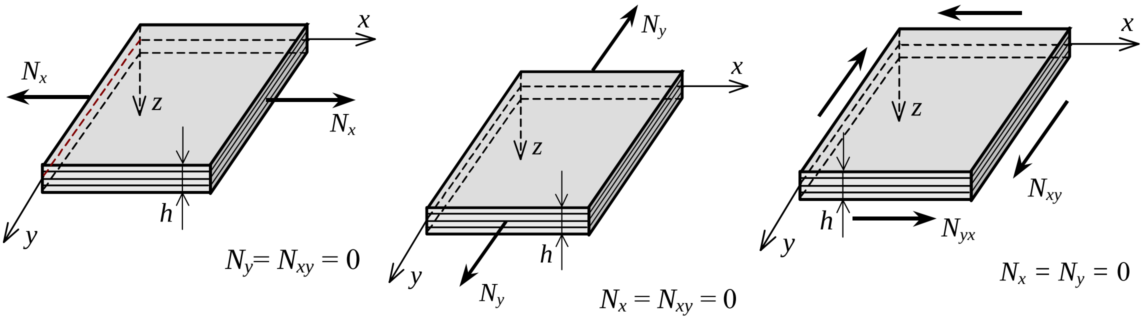

Figure 3. The in-plane loading of a symmetric laminated plate for computation of the effective engineering constants in (x, y)-coordinate system

3. ANALYSIS OF THE INFLUENCE OF LAMINATION ANGELS ON THE PROPERTIES, STRESSES AND STRAINS OF THE LAYERED PLATE

In the present work, the models of the angle-ply symmetric layered composite plates with various fiber lamination angles $(+\alpha, -\alpha, -\alpha, +\alpha)_T$ were analyzed. The observed models have been made up with four equals the unidirectional composite lamina from the materials: matrix – epoxy resin V913 and fibers E–Glass. The values of the lamina engineering constants are given in Table 1. Thicknesses of all laminas were 0,25 mm.

Table 1. Values of the lamina engineering constants for the analyzed composite laminate

Composite material of lamina	Fiber volume fraction V_f	Density of laminate ρ_C, kg/m^3	Longitudinal modulus of elasticity E_L, GPa	Transverse modulus of elasticity E_T, GPa	Shear modulus G_{LT}, GPa	Major Poisson's ratio ν_{LT}
E–Glass/V913	60 %	2016	45,20	11,60	4,37	0,27

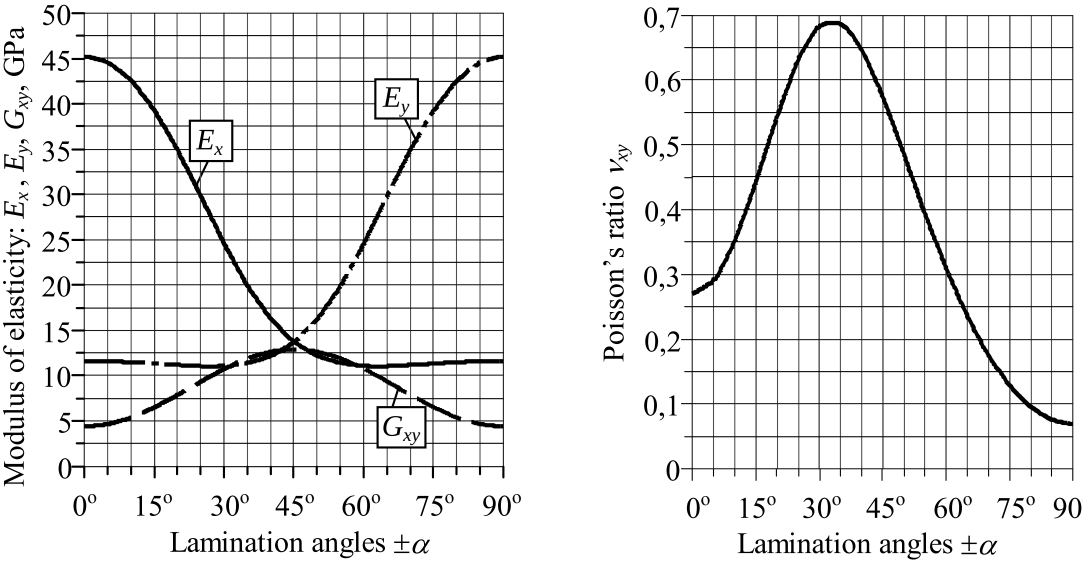

Figure 4. The effective engineering properties of the laminated composite plates for various lamination angles of layers

The effective engineering constants all the analyzed symmetric laminated plates by various lamination angles of laminas were obtained by using terms in Eqs. (11), and are shown graphically in diagrams on Fig. 4.

The results for the strains and stresses values in the layers of the analyzed symmetric angle-ply layered laminated plates subjected to the force resultant $N_x = 100$ N/mm, ($N_y = N_{xy} = 0$) and the bending moment resultant $M_x = 10$ N/m, ($M_y = M_{xy} = 0$) by using terms of Eqs. (8) and (10) were obtained. The distribution curves of those the calculated values through the layers as function of lamination angles for the analyzed laminated plates are shown graphically in diagrams on the Fig. 5 in the laminate (x, y)-axes. On the figures are upper indexes: "g" for top surfaces and "d" for bottom surfaces of layers; and lower index is signifying the number of layer in the laminated composite plates.

At all calculations in this paper own made PC software for analyzing of the laminated composite plates was applied.

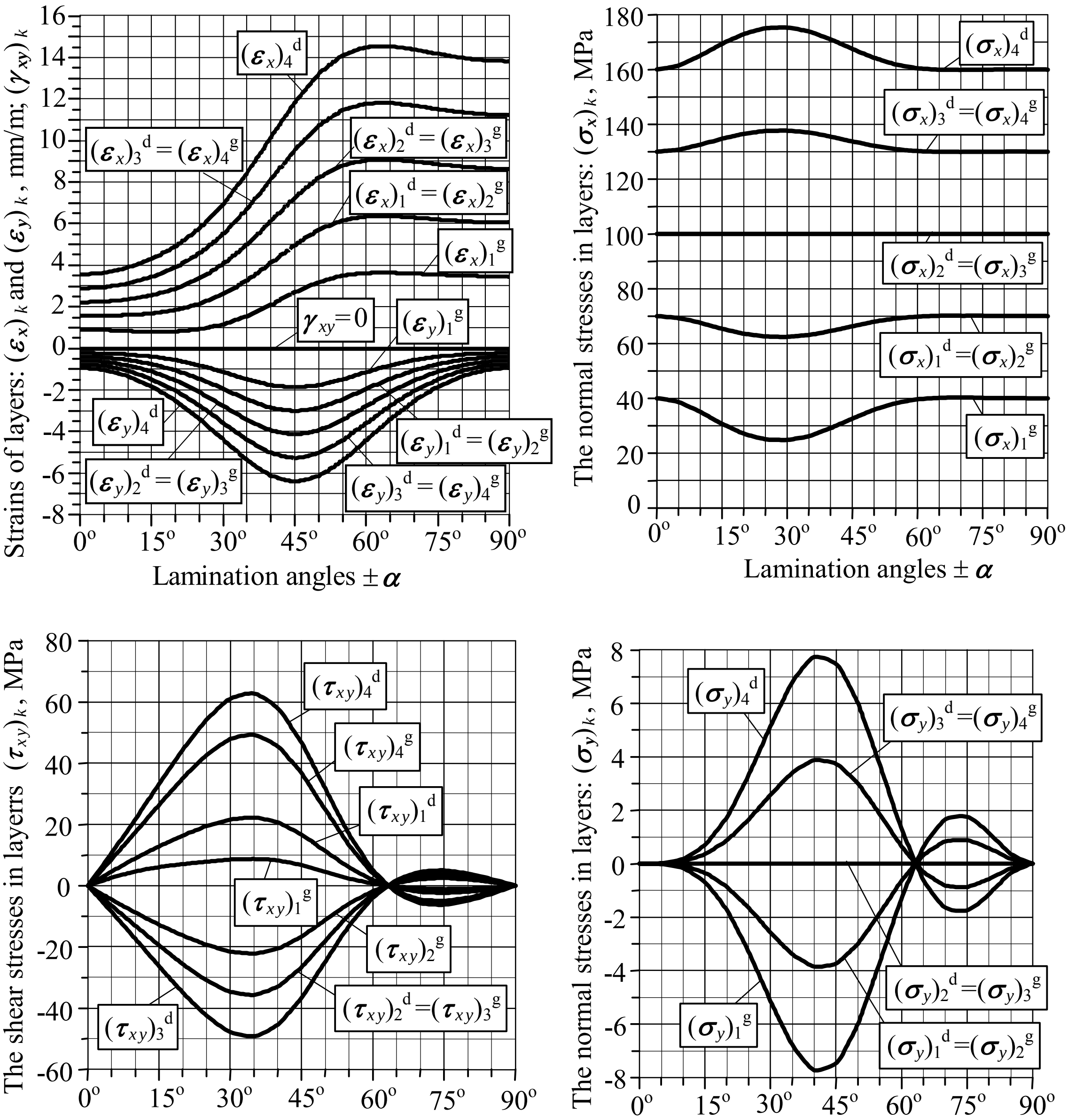

Figure 5. The strains and stresses on the top and bottom surfaces of layers in (x,y)-coordinates of the analyzed laminated plates for various lamination angles of layers, by same time the combined loading $N_x = 100$ N/mm and $M_x = 10$ N/m

4. CONCLUSIONS

The model of laminated composite plate has been developed to investigate the influence of the lamination angles of layers on the effective engineering elastic constants and the stress and strain values of the four-layered angle-ply symmetric laminated plates. In numerical analysis, coupled with classical lamination theory of the layered plates, the results for same time combined loads by the resultant force N_x and the bending moment resultant M_x were computed. Several of those numerous of the obtained results in diagrams on Figs. 4 and 5 are shown. The results of strain and stress analysis of developed models could be helpful to optimal design of laminated composite structures. Based on the results presented in this paper, the careful analysis of the stress values showed the great influence of the lamination angles of layers, and possibility of predicting deformations and stresses in composite plates.

The results obtained by applied analytical methods should be compared with the results of experimental investigations on the models, before manufacturing of plates in engineering practice [1].

For reliability assurance, an accurate prediction of the effective engineering elastic constants, the deformations and stress values of laminated structures is very important in aims decreasing costs of structures by manufacturing of laminate with necessary properties.

The strength of laminated composite structures also depends from arranging layers and their fiber direction. In particular, a suitability of the failure criteria for the first-ply failure analysis of the laminated composite structures under combined loads must be investigated, too [1, 5].

5. REFERENCES

[1] M. W. Hyer, Stress Analysis of Fiber-Reinforced Composite Materials, WCB/McGraw-Hill, New York, 1998.

[2] Z. Vnučec, Engineering Properties and Applications of the Laminated Composite Materials, RIM'99 – Revitalization and Modernization of Production, Proceedings, pp 71-78, Bihać, 1999.

[3] Z. Vnučec, Stress and strain analysis of symmetric laminated composite plates, TMT 2000 – Trends in the Development of Machinery and Associated Technology, Proceedings, pp 267-274, Zenica, 2000.

[4] Z. Vnučec, Influence of lamination angles on the stresses and strains values in the laminated composite plates, ATDC'02 - 1st DAAAM International Conference on Advanced Technologies for Developing Countries, Proceedings, pp 93-98, Slavonski Brod, 2002.

[5] R. F. Gibson, Principles of Composite Material Mechanics, McGraw-Hill, New York, 1994.