OPTIMIZATION OF A COGENERATION PLANT USING PINCH METHOD

Viktor Dragičević, Zmagoslav Prelec, Bernard Franković
Faculty of Engineering University of Rijeka, Vukovarska 58, HR-51000 Rijeka, Croatia
Phone: +385 51 651-521, 651 520, 651-506, Fax: +385 51 675-801
E-mail: viktor.dragicevic@riteh.hr, zmagoslav.prelec@riteh.hr, bernard.frankovic@riteh.hr

Abstract*: In this work a cogeneration power plant has been analyzed in the pursuit of possible process modifications that could reduce the energy consumption. The energy fluxes in the power plant's processes are analyzed using Sankey diagrams for various energy subsystems (steam turbines, gas turbines, district heat distribution system). Using the pinch analysis method, energy processes and energy flows in those subsystems have been analyzed. Results of the performed analysis and suggestions for possible modifications to achieve lower energy consumption are stated in the final paragraph.*

Key words: cogeneration, pinch analysis, energy saving

1. INTRODUCTION

Cogeneration combined steam and gas cycles are very efficient energy systems for combined electric and heat energy production. Production of energy using those types of energy cycles ensures maximum levels of total energy efficiency. This work shows a simulation and analysis of such a cogeneration power plant that is based on a real operating power plant example. The commercial software package Thermoflex has been used for constructing the model of the power plant and to obtain working parameters for steam generators, steam turbines, gas turbines, and other important components of the plant. The energy efficiency analysis of the power plant's performance has been performed using Sankey diagrams that show energy flows in the plant, and using pinch analysis of the entire power plant.

2. POWER PLANT LAYOUT AND BASIC TECHNICAL DATA

This work describes a complex cogeneration system with a steam cycle and a gas cycle, of a cogeneration power plant in Zagreb that is currently in operation as part of the Croatian electric power network. Besides electric energy, it distributes steam and district heat to the western part of Zagreb. The plant has been described in previous papers and reports, by numerous authors in both scientific and technical magazines, and therefore a model of the plant has been constructed using this available data. The older part of the power plant consists of three high pressure steam generators that produce steam for two steam turbines of 12,5 MW and 30 MW of electric power respectively. A low pressure steam generator is used for producing steam for the nearby industry, and three hot water generators are used to heat

district heating water. The newer part consists of two gas turbines, each of 26 MW of electric power output, equipped with heat recovery steam generators (HRSG) that produce steam that is outputted directly or used for heating district heating water. The steam generators that still operate in the older part of the plant use fuel oil and natural gas as fuel, while the gas turbines in the newer part of the plant use only natural gas, with a possibility of switching to fuel oil if necessary.

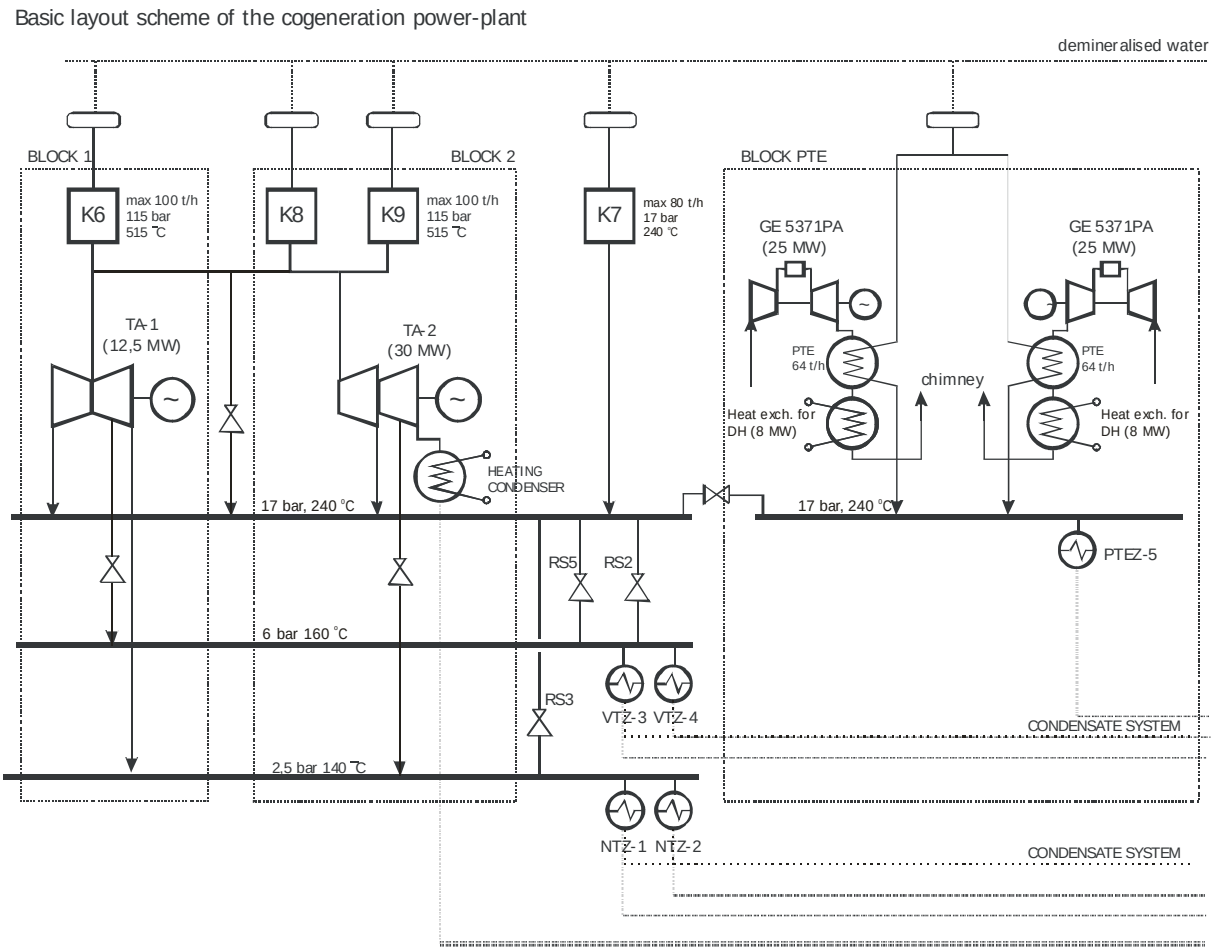

Figure 1. The basic layout of the power plant

High pressure steam generators are tagged as K6, K8 and K9. The steam witch is produced in steam generators K8 and K9 is used in steam turbine TA2 that can produce 30 MW of electric power. There is also a possibility of throttling the steam to the pressure for 17 bar for the direct use in the nearby industry. The steam turbine has two steam bleeds, one with the pressure regulation, and the other without any regulation. The steam from this turbine is conducted in the district heating condenser, using thus the condensing steam heat for heating district heating water. The high pressure steam generator K6 produces steam for the steam turbine TA-1 that produces approx. 12,5 MW of electric power. The steam turbine TA-1 is an expansion turbine with two steam bleeds, one with pressure regulation, and the other without any regulation. The steam from the turbine expands to 2,5 bar and is then led to the low pressure steam manifold.

The only low pressure steam generator still in operation is K7. The low pressure steam generator produces steam at 17 bar pressure, which is used mainly for the nearby industry's needs. The plant uses medium and low pressure steam (7 and 2,5 bar) for its own energy needs, as well for heating district heating water. This steam is produced by steam bleed from

the steam turbines and from throttling the high pressure steam (17 bar). The plant uses this steam for heating deaerators in the boiler feed water system of each steam generator (low pressure steam). An important amount of this steam is used in the feed water pre-heaters for high pressure steam generators. To that end, medium pressure steam is used, and the resulting condensate is fed to the deaerators. The water of the district heating system is heated by series of various types of heat exchangers – condenser of the TA-2, and low- and high-pressure water heaters (named NTZ and VTZ). The final water temperature, that is required by the outside temperature conditions, is reached by heating the water in the heat generators (KW1 - 3), that use fuel oil and natural gas. District heating water flows through the low- and high pressure heaters and this can be done both in series and in parallel flow. The way in which water is passed through these heaters is determined by the amount of water that must be heated. The temperature of the hot water that has to be reached at the plant's exit is in direct correlation with the outside temperature, and it is regulated by by-passing and reducing the flow through the low- and high-pressure district heating water heaters.

The new part of the power plant consists of two gas turbines, GE5371 PA, each producing 26 MW of electric power, and two heat recovery steam generators. The combustion gases exit the turbine with approx. 500 °C, and then enter the heat recovery steam generator to generate steam. The exhaust gases, after passing additional heat exchangers, enter the chimney and then are released in the atmosphere with a temperature of 100 ^{0}C.

3. ENERGY FLOWS IN THE POWER PLANT

For this analysis, the power plant is working in winter conditions, with average heat loads and electric energy production that is characteristic for winter season. The conditions are characteristic of an average winter day at 12:00 hours. The following table shows the load conditions of the cogeneration power plant with heat and electric loads respectively.

Table 1. Heat and electric loads

Network requirements	**Power**	**Flow**	**Temperature**	**Pressure**
Heating energy output	160 MW	3440 t/h	80^{0}C/120^{0}C	1.8 bar
Steam production	-	140 t/h	240^{0}C	17 bar
Electric energy output (minimum)	90 MW	-	-	-

Table 2. Load distribution in the power plant

Unit	**Mark**	**Steam flow**	**Steam pressure**	**Steam temperature**	**Heat produced**	**Electric power**
		t/h	bar	^{0}C	MW	MW
Steam generator	K6	100	115	515	-	-
Steam generator	K7	80	17	240	-	-
Steam generator	K8	100	115	515	-	-
Steam generator	K9	100	115	515	-	-
Steam turbine	TA-1	100	115	515	-	12.5
Steam turbine	TA-2	200	115	515	-	30
Gas turbine	PTE1	64	17	235	-	25
Gas turbine	PTE2	64	17	235	-	25
Total electric energy produced						**92.5**
High pressure water heater	PTEZ-5	64	17	240	34	-
Medium pressure water heater	VTZ-3	52.25	6	160	30	-
Medium pressure water heater	VTZ-3	52.25	6	160	30	-
Low pressure water heater	NTZ-2	36.6	2.5	140	22	-
Low pressure water heater	NTZ-2	36.6	2.5	140	22	-
Total heating energy produced					**138**	
(outside the cogeneration process)						
Hot water generator	KW1	-			22	

.

To perform an efficiency analysis of the cogeneration power plant, a computer model has been built and a simulation of the systems that are working in the plant has been performed. Using this model it was possible to show exactly what the energy flows inside the power plant are. The modeling and simulation was performed using the software package ThermoFlex, taking into consideration characteristics of steam generators and turbines.

The energy flow through parts of the plant is shown using of Sankey diagrams, including the energy flow between the three steam pressure levels. The system of condensate collection and the according values are based on field data. The following figures show diagrams of various independent subsystems followed by a Sankey diagram showing the flow of energy in those energy subsystems.

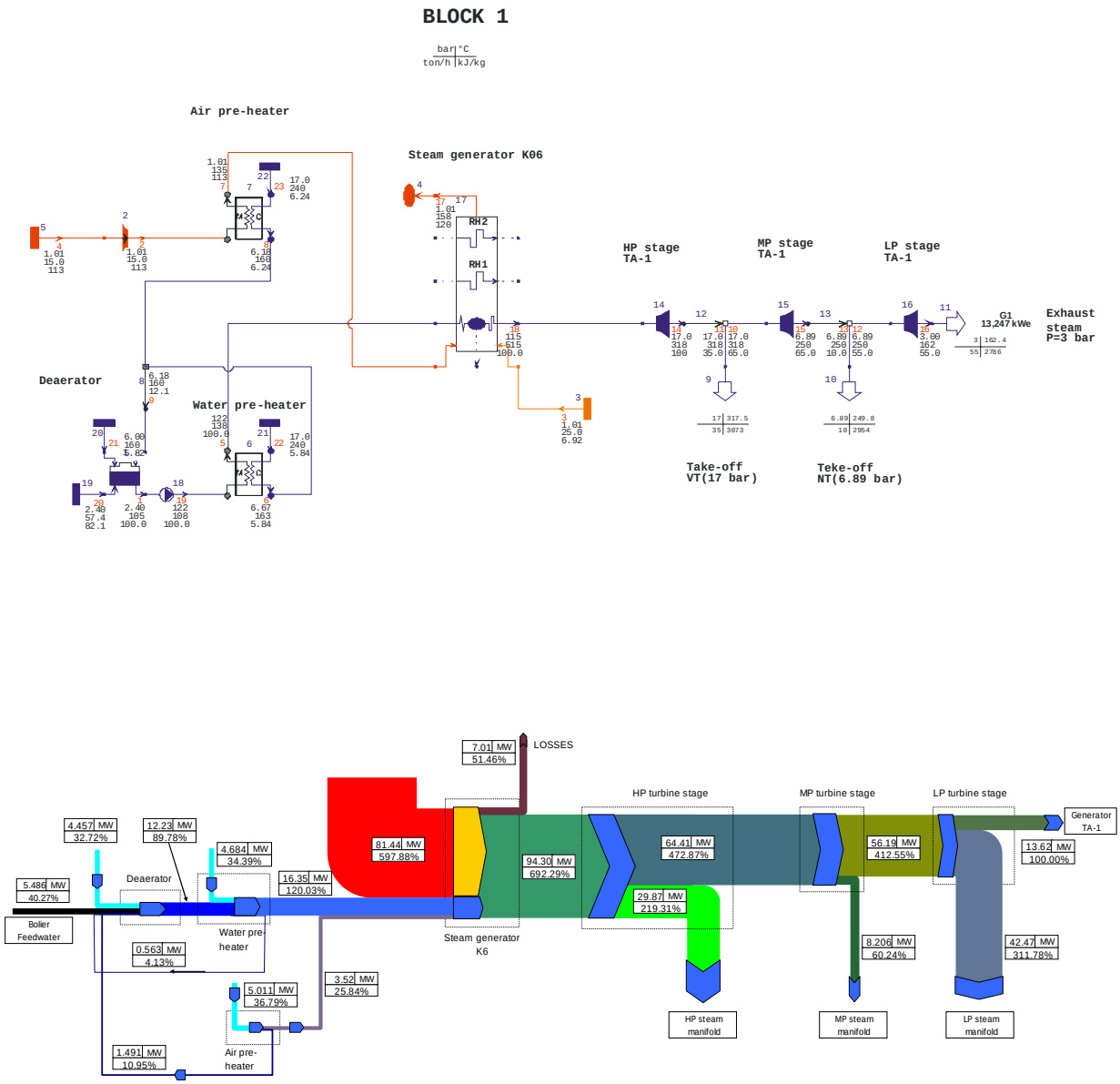

Figure 2. Computer model of BLOCK 1 and the energy flow
(100% - electric power generated)

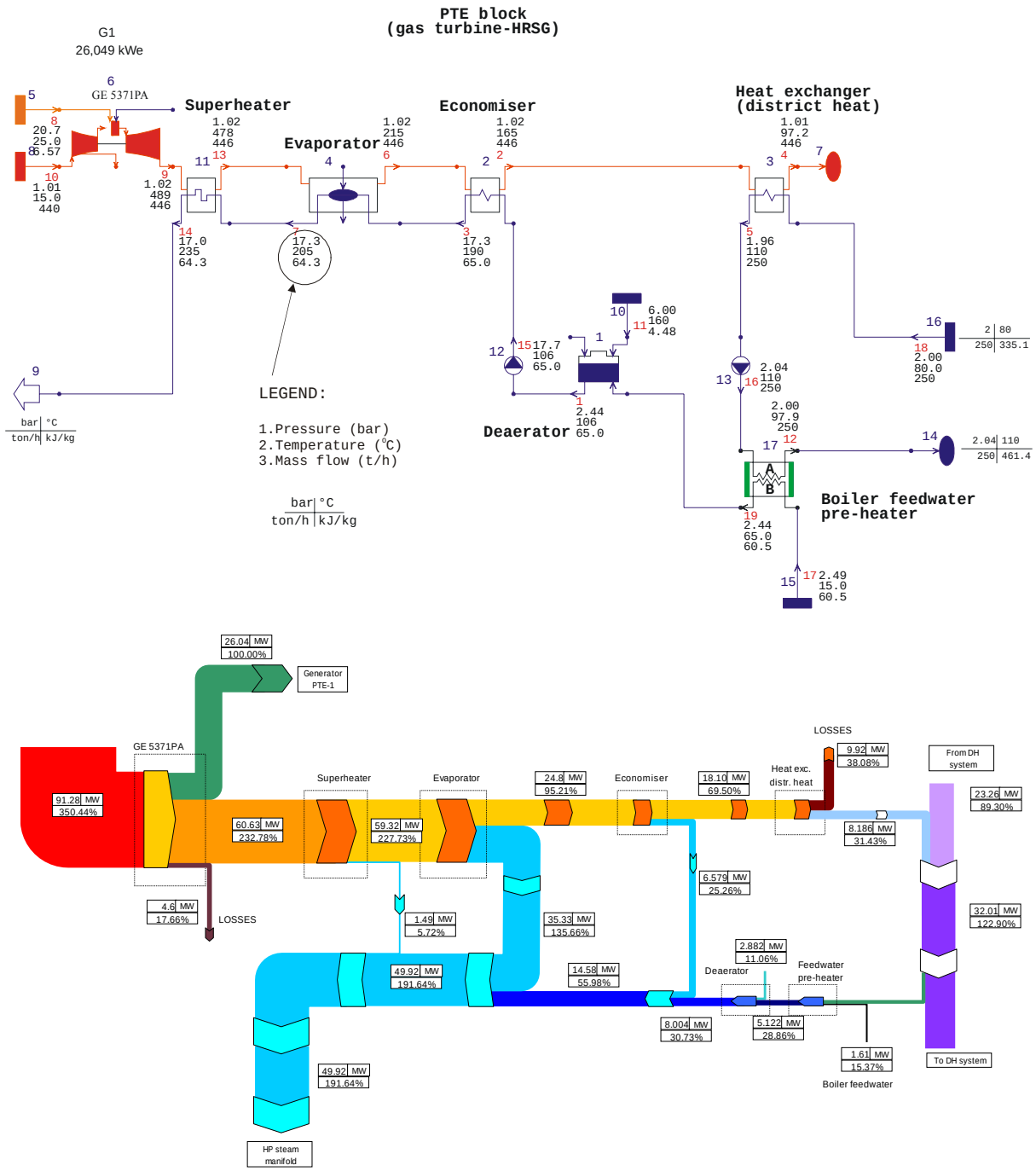

Figure 3. Computer model of the gas turbine – heat recovery steam generator (HRSG) and the energy flow (100% - electric power generated)

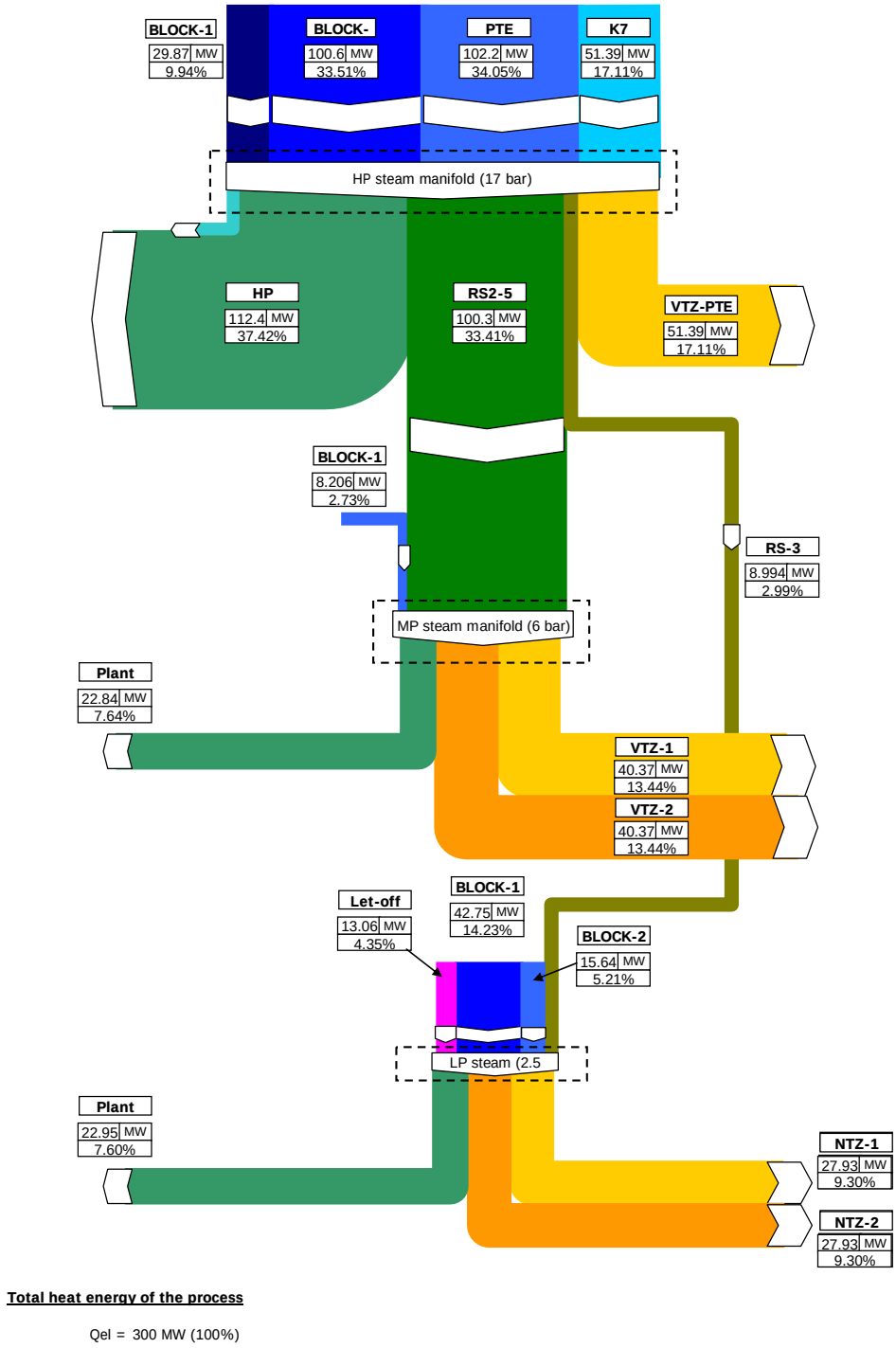

Figure 4. Energy flow between steam pressure levels (100% - total heat energy required by district heating and steam)

The most notable losses that can be seen in the preceding diagrams are generated by throttling steam from high pressure to medium pressure at the pressure reduction stations (throttling steam valves). The energy flow passing through the throttling valves is about half of the total energy used to heat water for the district heating system, and about one third of the total energy entering the cogeneration system. The throttling of steam is an exergy loss and it should be avoided. For that purpose, further analysis of the power plant is performed using pinch method analysis, to see how these exergy losses could be avoided.

4. PINCH ANALYSIS

Pinch analysis is one of the most commonly used methods of analysis in the pursuit of PI (Process Integration). This method is used for reduction of energy consumption in complex energy systems in process and other industries. This method is becoming more popular since it doesn't only reduce energy consumption, but also lowers greenhouse gases emission, thus making it a necessary measure for an ecological process improvement. Pinch analysis, combined with the power of computer process simulation, provides a powerful tool for a systematic analysis of industrial processes and interactions between parts of those processes. The pinch method is an analysis by integration, so the basic principle of this method is integration of heat flows. It enables the determination of minimal theoretical fuel, steam and cooling water consumption. This is accomplished by analyzing the hot and cold energy streams, or streams that need to be heated or cooled, and the possibilities of heat transfer between those streams. These streams are used to construct composite curves for hot and cold flows, or heat sources and heat sinks. To perform a pinch analysis it is imperative to correctly identify all heat sources and sinks in the processes in the cogeneration power plant.

Heat sources are heat flows that require cooling or in this case heat sources are gas turbine exhaust gases, exhaust steam from steam turbine bleeds, and waste heat form the steam turbine TA-2 condenser. They can be shown in the $\dot{Q}-T$ diagram.

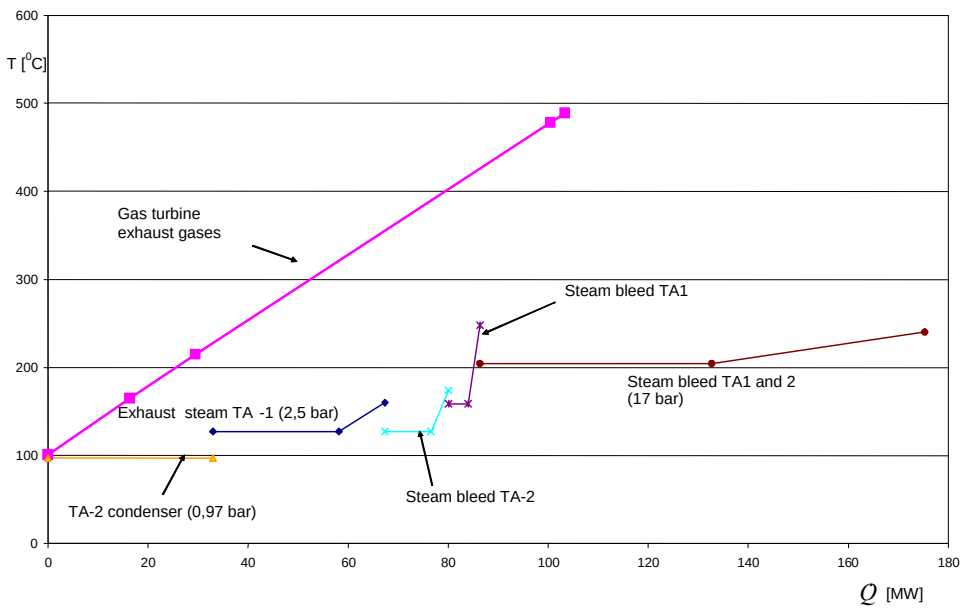

Figure 5. Diagram *Q-T* for heat sources

Heat sinks or cold flows are heat flows that enter the power plant and need to be heated like return water from the district heating system and steam for the industry at 17 bar pressure 240 ^{0}C temperature. For this analysis, the steam heat flow heating starts at 105^{0}C, i.e. at feedwater temperature in the deaerators. The steam that is used for heating feed water is not shown here, but it is taken into consideration in the construction of the composite curves.

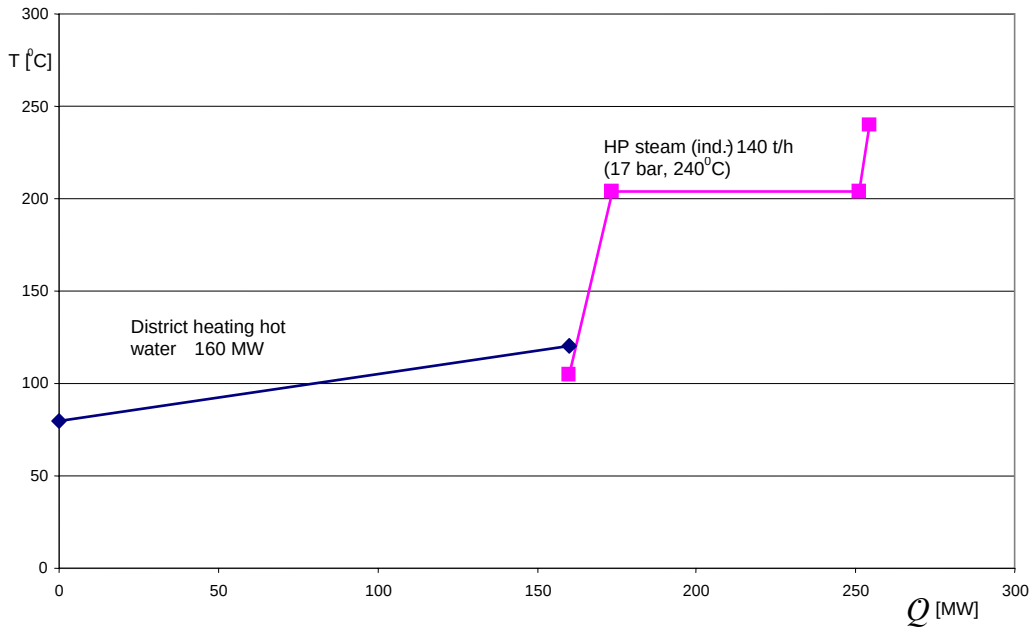

Figure 6. Diagram $\dot{Q} - T$ for heat sinks

Using *Q-T* diagrams for heat sources and heat sinks, the following composite curves were constructed:

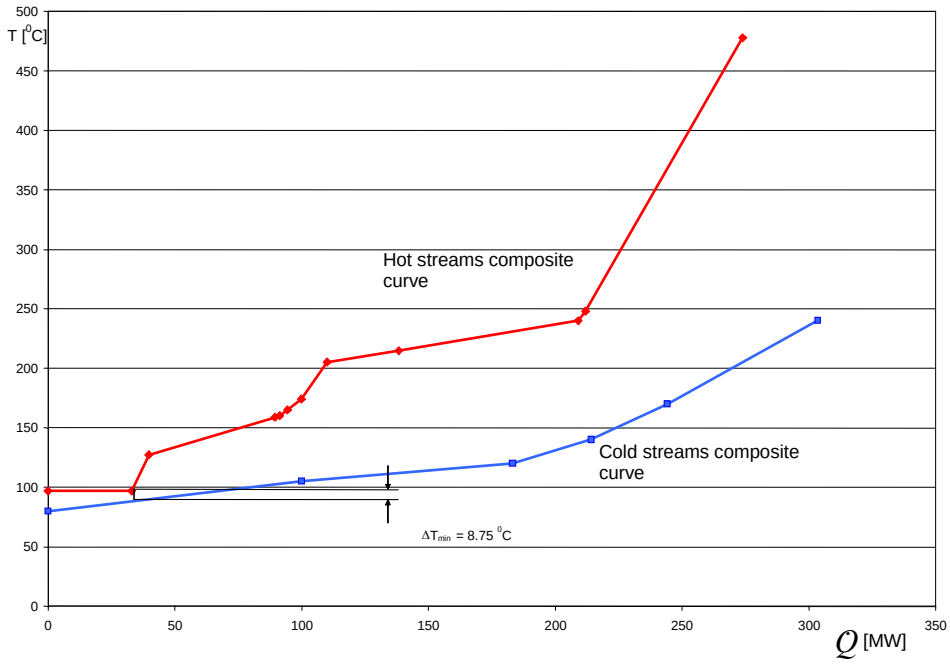

Figure 7. Composite curve diagrams

After constructing the composite curves, the GCC (Grand Composite Curve) is constructed:

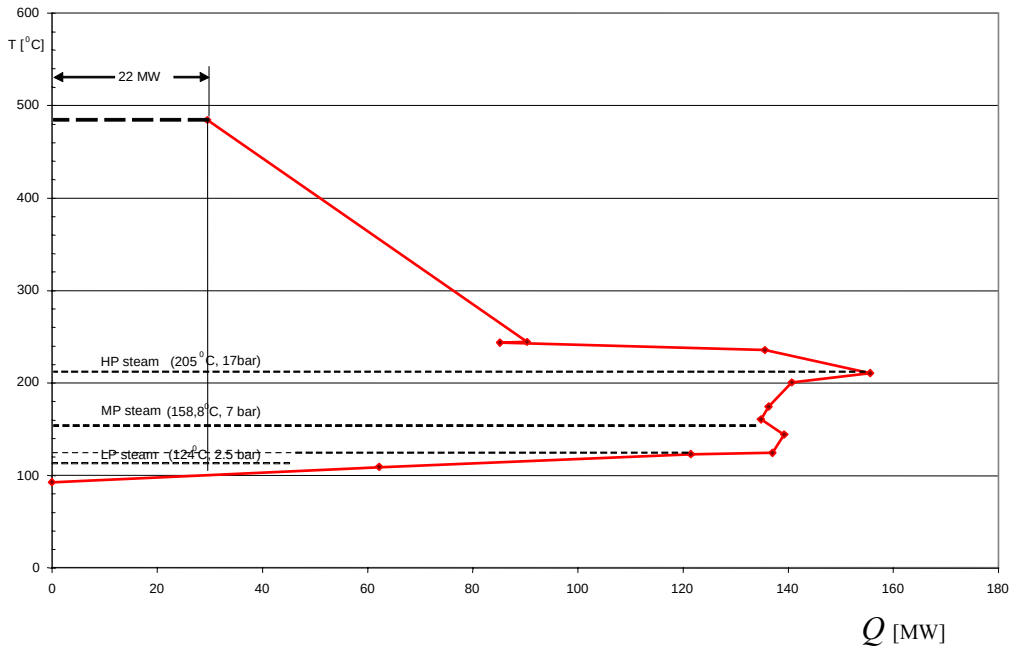

Figure 8. Grand Composite Curve (GCC):

In figure 8 the Grand Composite Curve (GCC) is shown, together with the saturation temperature for the three steam pressure levels. Based on the GCC it is possible to analyze the pressure levels at which it is best to add required additional energy for the process and avoiding the excessive use of valuable high pressure steam.

The pinch analysis shows that this process doesn't require additional cooling of heat sources but only additional heating of heat sinks.

The total required additional heat is 22 MW, while the other heat energy is coming from the steam turbine exhaust on TA-1, steam bleeds at TA-1 and TA-2, the heat of condensation steam at the exit of condensing turbine TA-2, and the utilization of exhaust gases from the gas turbines.

Required heat energy (steam and district heating)	=	301 MW
Heat exchanged from the heat sources	=	279 MW
Additional heating energy required	=	**22 MW**

The GCC shows the optimum temperature levels for additional heat (utility pinch). Those temperatures shown in figure 8 are saturation temperatures for various steam pressure levels that are used in the power plant.

The additional heat can be entirely added at the temperature level of little above 100 ^{0}C. For this purpose, heat generators are currently used to supply that amount of heat.
It would be far more efficient that this amount of heat is supplied at a higher pressure level. In that way, the efficiency of the cogeneration process would be increased, because in addition to heat, the energy input would produce also electric energy.

Figure 7 shows that the pinch point of the process is at the exit of the steam turbine TA-2 condenser. The pinch is already low enough and the reduction of the pinch would result in a small energy saving, but with additional investments required for new heat exchangers.

5. CONCLUSIONS

The results of the pinch analysis show that 22 MW of additional heating energy is necessary for the analyzed cogeneration process in order to meet all the needs for heating district heating water and for steam production in the case of considered energy balance.

The main suggested improvement from this pinch analysis is that this additional energy should be brought in form of 115 bar pressure steam, and then let through a steam turbine with bleed at 17 , 6 and 2,5 bar. The existing hot water generators can be used as a backup. With this modification the CHP efficiency would improve significantly, especially in the winter months.

Furthermore, the flow of steam through throttling valves RS2-5 should be brought to a minimum, since this process represents a significant exergy loss. To avoid these losses, production of middle pressure (7 bar) should be raised, and this could be accomplished by installing dual-pressure heat recovery steam generators. These steam generators should be able to produce steam of both 17 bar and 7 bar at the same time. This possibility was also demonstrated by the pinch analysis. The high pressure heat exchanger (PTE-Z5) should be eliminated and replaced, because it uses high pressure steam (17 bar and 240^0C temperature) to heat hot water with a far too great temperature differential.

In the end it should be noted that this analysis was performed on typical winter load conditions for heat and electricity. The optimal configuration for this case isn't necessary the optimal configuration overall, but since the highest consumption of energy is in the winter period, this configuration should result in significant fuel savings for the operation of the power plant.

Suggested modifications:

1. Replacement of steam generator K7 with a high pressure steam generator (115 bar) of the same capacity
2. Installation of a new steam turbine TA-3 with two steam bleed (17 and 6 bar) with an exhaust pressure of 2,5 bar
3. Replacement of the gas turbine's heat recovery steam generators (HRSG) with a dual pressure heat recovery steam generator (HRSG)

The analysis of investment costs for the suggested modifications is out of the scope of this work.

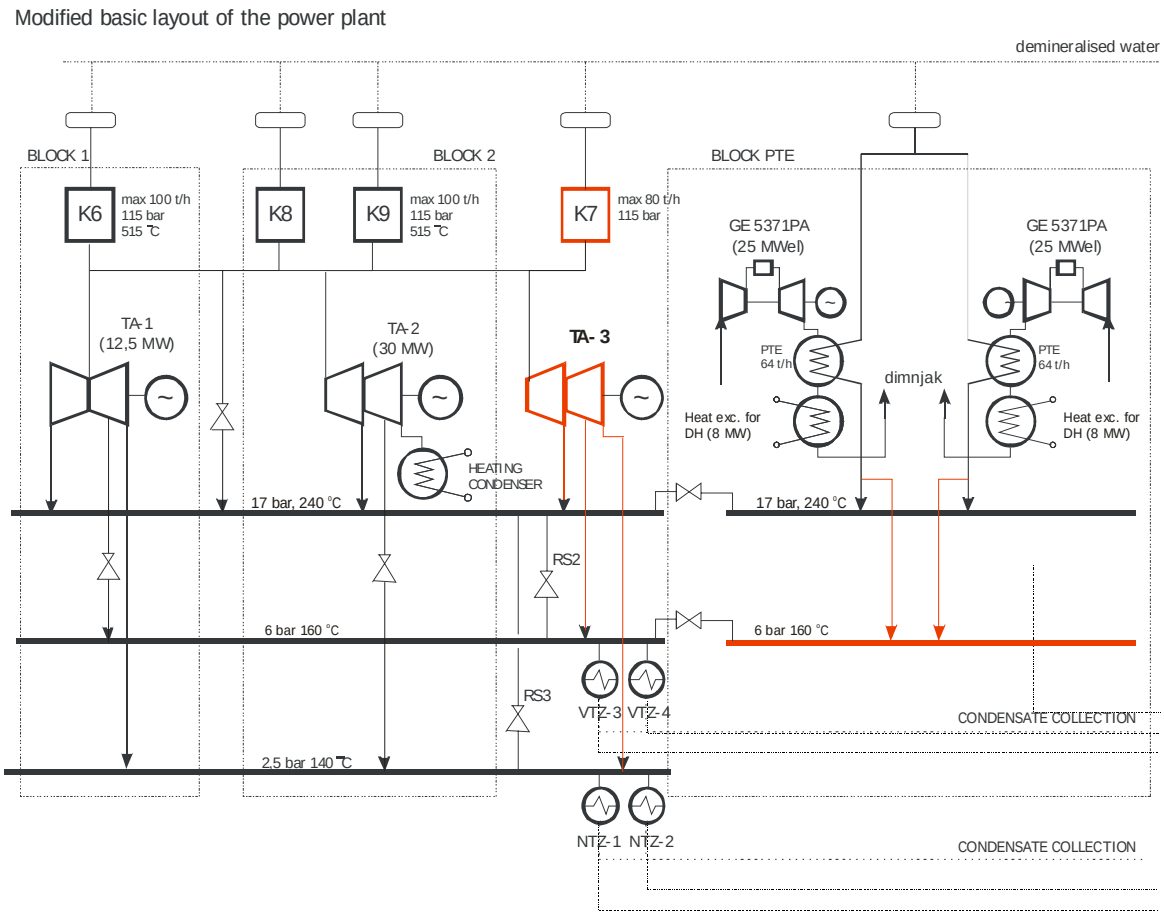

Figure 9. The modified layout of the power plant

REFERENCES

[1] Prelec, Z., *Energetika u procesnoj industriji*, Školska knjiga, Zagreb, 1994

[2] Linnhoff, B., Pooley, G.T.,:*General process improvements through pinch technology*, Linnhoff March Ltd.

[3] Ahmad, S., Hall, S., Morgan, S. Parker, S., *Practical process integration – an introduction to pinch technology,* Aspen Technology Inc.

[4] Eastwood, A. R., Kelfkens, R.C., *Development of site-wide energy strategies*, Linhoff March Linited, England

[5] Bošnjaković, F., *Nauka o toplini 3*, Tehnička knjiga, Zagreb, 1976.

[6] *Thermoflex Users Guide*, Thermoflow inc.

[7] Prelec, Z., Milošević, Š., *Environmental aspects od cogeneration plants*, Međunarnodni kongres Energija i okoliš XVII, 221-222, Opatija, 2000.

[8] Klimisch, H. J., Andreae, M., Tillman, U, *Summary of information on heavy fuel oils*, American Petroleum Institute (API), 2004.

[9] Medica, V., Franković, B., *Toward low NO_x hydrogen fueled internal combustion engine*, Hydrogen energy progress XII, Buenos Aires, 1317-1324, 1998.

OPTIMIZACIJA KOGENERACIJSKOG SUSTAVA PRIMJENOM PINCH METODE

Sažetak: *U ovom je radu analiziran pogon jedne kogeneracijske termoelektrane-toplane u cilju ocjene mogućih poboljšanja sa stanovišta uštede energije. Prikazani su energetski tokovi u elektrani korištenjem Sankeyevih dijagrama za pojedine podsustave pogona (parno-turbinski blokovi, blok plinskih turbina te sustav distribucije topline za kogeneraciju). Analizirani su energetski procesi po pojedinim sustavima kao i energetski tokovi unutar elektrane korištenjem pinch metode. U zaključku su navedeni rezultati provedene analize kao i prijedlozi za optimizaciju i moguće uštede energije.*

Ključne riječi: kogeneracija, ušteda energije, pinch analiza