Modeling and Control of PMSM Drive Using MRAC with Signal Adaptation Algorithm

Miroslav Horvatic
University of Applied Sciences
J. Krizanica b.b., 42000 Varazdin, Croatia
E-mail: miroslav.horvatic@vels.hr

Zeljko Ban, Toni Bjazic
Department of Control and Computer Engineering
University of Zagreb
Faculty of Electrical Engineering and Computing
Unska 3, HR-10000 Zagreb, Croatia
E-mail: zeljko.ban@fer.hr

***Abstract*— The paper deals with modeling and control of the permanent magnet synchronous motor (PMSM) drive. The mathematical model of the drive with basic PI control loops is obtained from experimental data by parameter optimization. The model reference adaptive control (MRAC) algorithm with signal adaptation is adjusted for control of the drive in presence of the measuring noise. Algorithm parameters are obtained by computer optimization. Behavior of the control system is tested by computer simulation.**

I. Introduction

The permanent magnet synchronous motor (PMSM) drive is drive which significance rise in the group of low power drives in recent years because of the higher power density, lower moment of inertia and simplicity of the motor maintenance [1]. The usage of vector control simplifies the speed and torque control procedures and enables wide area of application of the motor [1], [2]. However, the variation in moment of inertia of the drive causes the change in the quality of the transient response, i.e. transient response speed and overshoots. In the cases where the unchanged quality of the transient response is required with the presence of the moment inertia changes, the intelligent control algorithm is required. The adaptive control algorithms could be used for rotation speed control for PMSM drive with changeable moment of inertia [4], [5], [7].

The adaptive control algorithms are sensible to presence of the noise in the feedback signal. So, the filtering of the measured signal should be considered for application of the adaptive control.

In this paper, the model reference adaptive control (MRAC) algorithm with signal adaptation is applied for control of the PMSM drive with changeable moment of inertia [4], [5], [6]. The primary control loops of the PMSM drive are the torque vector control and PI rotation speed control. The primary control loop algorithms are implemented in Servo PLC controller, which contains power supply in addition to primary controllers. The adaptive control loop should be designed as a outer control loop, which could be implemented in additional microcontroller. In order to determine the form and parameters of the adaptive control algorithm, the mathematical model of the PMSM drive is required.

The form of the mathematical model of the PMSM drive is obtained by analytical approach [1], [2], [3], while the parameters are found by optimization procedure according to measured data. As the significant noise signal is present in the measured rotation speed signal, it is necessary to add the noise signal with the same main characteristic in the mathematical model. The adjustable filter is designed in order to improve stability and behavior of the adaptive system. The main goals in the filter design were reducing the noise impact to control and influencing to the system transient response as little as possible.

The MRAC with signal adaptation algorithm consist of the reference model and adaptation mechanism. The reference model is designed as a reduced order reference model which response is as close as possible to the response of the controlled drive with rated parameters. The parameters of the adaptive control algorithm are obtained by optimization procedure in a way to compensate the influence of the moment inertia change to system response.

The achieved results are tested by computer simulation using Matlab/Simulink program package [8].

II. Mathematical model of the PMSM drive

The PMSM drive consists of Permanent Magnet Synchronous Motor and vector controlled servo converter with resolver speed feedback.

Nonlinear dynamic model of the PMSM is obtained according to [1]. The stator voltage equations could be described by following differential equations:

$$u_q = Ri_q + L_q \frac{di_q}{dt} + \omega L_d i_d + \omega \psi_r, \tag{1}$$

$$u_d = Ri_d + L_d \frac{di_d}{dt} - \omega L_q i_q, \tag{2}$$

where
u_d, u_q – stator voltages in $d-q$ coordinate system, (V),
i_d, i_q – stator currents in $d-q$ rotor coordinate frame, (A),
R – stator resistance (Ω),
L_d – inductance in direct axis, (H),
L_q - inductance in direction of q axis, (H),
ψ_r – rotor magnetic flux linkage in stator, (Vs)
ω – electrical rotor speed, (rad/s).

The electromagnetic torque of PMSM has a form

$$m_d = \frac{3}{2} p \left[\psi_r i_q + (L_d - L_q) i_q i_d \right], \tag{3}$$

where p is number of motor pole pairs.

Using vector control method [1] the torque and flux control separation is provided in equations (1) to (3). For the rotation speed lower than rated rotation speed of the drive, the zero direct axis current control method is used. This method determined equalizing the direct axis current

to zero in equations (1) to (3). According to this procedure, the equations (1) to (3) assumes the following form:

$$u_q = Ri_q + L_q \frac{di_q}{dt} + \omega\psi_r, \tag{4}$$

$$u_d = -\omega L_q i_q, \tag{5}$$

$$m_d = \frac{3}{2} p\psi_r i_q. \tag{6}$$

Taking into account that the rotor flux linkage ψ_r is constant at constant temperature, the equations (4) to (6) assume the form of the linear differential equations. These equations are similar to the equations of the separately excited dc motor drive with the constant flux excitation. The current i_q represents the component of the stator current that produces the torque. The electromechanical equation of the motor could be described by the following equation:

$$J\frac{d\omega_m}{dt} = (m_d - m_l - m_{fr}), \tag{7}$$

where
J – total moment of inertia, (kgm^2)
ω_m – mechanical rotor speed, (rad/s),
m_l – is load torque, (Nm),
m_{fr} – torque produced by friction, (Nm).

Electrical rotor speed is proportional to mechanical rotor speed:

$$\omega = p\omega_m. \tag{8}$$

The linear model of the PMSM drive according to Laplace transform of the equations (4) to (8) is shown on Fig. 1.

The primary control of PMSM drive is based on cascade control with two control loops: torque control loop and rotation speed control loop. The primary controllers are implemented by digital signal processor in servo PLC system. The switching frequency of the inverter controlled by microcontroller is 16 kHz. As the response of the torque control loop is significantly faster than the response of the speed control loop the torque control loop could be simplified and approximated by element with proportional behavior [3]. So, the torque controller together with vector control algorithms, switcher and stator circuit relevant for determining the torque of the motor could be described with following equation:

$$G_t(s) = \frac{M_d(s)}{M_{drefV}(s)} = K_t, \tag{9}$$

where
$G_t(s)$ – transfer function of the torque control loop,
K_t – torque control loop gain, (Nm/V),
M_d – torque of the PMSM, (Nm),

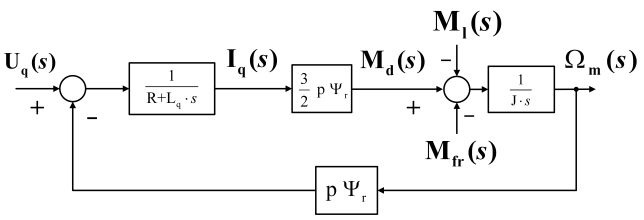

Fig. 1. Linear block diagram of the PMSM drive.

TABLE I
THE PARAMETERS OF THE PMSM DRIVE MODEL OBTAINED BY OPTIMIZATION.

Par.	Value	Unit	Par.	Value	Unit
K_t	0.073	Nm/V	$K_{p\omega}$	5	
T_d	1	ms	$T_{i\omega}$	20	ms
K_ω	0.0318	Vs/rad	T_ω	2	ms
J_n	$7.2 \cdot 10^{-5}$	kgm^2	M_t	0.043	Nm

M_{drefV} – reference signal of the torque (V),
s – Laplace variable.

The rotation speed is measured by resolver which signal is filtered. The transfer function of the resolver and filter could be described with transfer function:

$$G_\omega(s) = \frac{\Omega_{mrV}(s)}{\Omega_m(s)} = \frac{K_\omega}{1 + T_\omega s}, \tag{10}$$

where
G_ω – transfer function of the rotation speed sensor,
K_ω – gain of the rotation speed sensor, (Vs/rad),
T_ω – time constant of the rotation speed sensor, (s),
Ω_m – rotation speed of the PMSM, (rad/s),
Ω_{mrV} – measured signal of the rotation speed, (V).

The rotation speed controller is PI controller and could be described by transfer function:

$$G_c(s) = \frac{M_{drefV}(s)}{\Omega_{mrefV}(s) - \Omega_{mrV}(s)} = K_{p\omega}\left(1 + \frac{1}{T_{i\omega}s}\right), \tag{11}$$

where
$K_{p\omega}$ – gain of the speed controller,
$T_{i\omega}$ – time constant of the speed controller, (s),
Ω_{mrefV} – reference signal of the rotation speed, (V).

The communication between the Servo PLC where the primary controllers are implemented and additional controller for the adaptive control algorithm is realized by analog signals. So, the A/D and D/A converters are used for conversion of the signals from the analog to the digital form and from the digital to the analog form, respectively. The transfer function of the controller with built-in filter is described by transfer function of the form:

$$G_{A/D}(s) = G_{D/A}(s) = \frac{1}{1 + T_d s} \tag{12}$$

where T_d is time constant of the A/D and D/A converter.

The controlled PMSM drive is mechanically coupled with another PMSM drive which is used for producing load torque. Beside the load torque, the Coulomb friction torque is present. The friction torque could be described by the equation of the form:

$$M_{fr}(t) = M_t \,\mathrm{sign}(\omega_m) \tag{13}$$

where M_t is constant value of the Coulomb friction torque.

The block diagram of the complete PMSM drive is shown on Fig. 2.

The parameters of the PMSM drive are obtained according to manufacturer data and by optimization procedure according to measured signals of the drive. Optimization process is performed by Matlab/Simulink program package with Optimization toolbox [8], [9]. The drive parameters are shown in Table I.

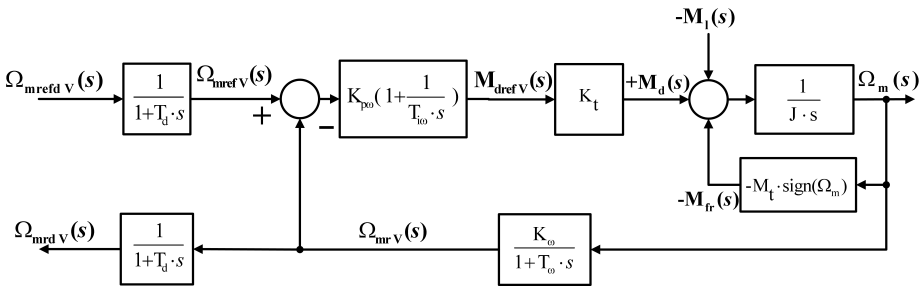

Fig. 2. Block diagram of vector controlled PMSM drive system.

According to rotation speed recording, it is evident that influence of the variable moment of inertia of the loading mechanism to the PMSM drive significantly change the quality of the transient responses. So, the application of the adaptive control algorithm is recommended.

III. MRAC ALGORITHM WITH SIGNAL ADAPTATION

The classical approach to the MRAC system design requires the same order of the referent model and the adjustable system as well as the measurable full state vector [10], [11]. The MRAC system with signal adaptation is stable according to the Lyapunov stability criterion if the adaptive algorithm has the following form [10], [11], [12]:

$$\begin{aligned} u_A(t) &= h \cdot \operatorname{sign}(\nu(t)), \\ \nu(t) &= \underline{d}^T \underline{e}(t), \end{aligned} \tag{14}$$

where
$\underline{d}^T$ – weighting coefficient row vector,
$\underline{e}$ – reference model and adjustable system state error vector,
h – value of the maximal adaptation signal,
ν – generalized error signal,
u_A - adaptation signal.

Adaptive control algorithm according to equation (14) causes oscillations in the system. The oscillations could be avoided by modified MRAC algorithm with signal adaptation of the form:

$$u_A(t) = \operatorname{sat}(\nu(t), h) = \begin{cases} h & \forall K_v \cdot \nu(t) > h \\ K_v \cdot \nu(t), & \forall |K_v \cdot \nu(t)| \leqslant h \\ -h & \forall K_v \cdot \nu(t) < -h \end{cases}, \tag{15}$$

where K_ν is the gain coefficient of the generalized error.

As the full state vector mostly is not observable as well as the full order of the system is not even known, the modified adaptive control algorithm should be used. If the reference model of the reduced order and reduced order state variable vector is used the adaptive system could be stable for bounded range of system parameter variation [4], [5], [6]. Moreover, it is possible to compute error signal as the difference between the reference model and adjustable system measured output variable. In that case, the necessary error vector $e(t)$ of the reduced order should be obtained by estimation. The MRAC algorithm with signal adaptation is sensitive to the noise in the measured output signal of the adjustable system. So if the significant noise is present, the filtering of the signal should be performed. The filter should have the characteristic which should satisfactory reduce the noise and should not deteriorate the characteristic of the signal.

A. Structure of the adaptive control algorithm

The modified MRAC algorithm with signal adaptation is designed according to equation (15). In the algorithm design the reduced order reference model is used. The desired behavior of the adjustable system in presence of the variation of the moment of inertia is determined by third order reference model. The reference model has the form:

$$G_{RM}(s) = \frac{1}{a_{m3}s^3 + a_{m2}s^2 + a_{m1}s + 1}. \tag{16}$$

The parameters of the reference model are obtained by optimization, so that reference model describes the drive's behavior with nominal moment of inertia. Its parameters are shown in Table II.

The error vector determined by output variable of the PMSM drive and reference model is the first order vector. As the reduced error vector should consist of two more state variables, the first and second derivative of the error signal should be obtained. Instead of using estimator the discrete domain numerical derivative calculation method is used. The transfer functions for determining the derivatives of the error signal in the Z domain has the following form:

$$G_{1mrdV}(z) = \frac{z-1}{T_{disc}z}, \quad G_{2mrdV}(z) = \frac{z^2-2z+1}{T_{disc}^2 z^2}, \tag{17}$$

where
$G_{1mrdV}(z)$ – transfer function for calculation of the first derivative,
$G_{2mrdV}(z)$ – transfer function for calculation of the second derivative,
T_{disc} – sampling time,
z – Z-domain variable.

Block diagram of the whole adaptive control system based on the modified MRAC algorithm with signal adaptation according to equations (15) to (17) is shown on Fig. 3. To achieve the rotation speed response overshoot lower than 10%, a first order filter with time constant $T_{ci} = 9.4$ ms and unity gain is added to the drive input.

The PMSM drive is modeled according to the block diagram on Fig. 2. The adaptive control algorithm should be implemented in the microcontroller. As the PMSM drive

TABLE II
THE REFERENCE MODEL PARAMETERS.

Parameter	Value
a_{m1}	0.012295
a_{m2}	$9.6679 \cdot 10^{-5}$
a_{m3}	$1.7343 \cdot 10^{-7}$

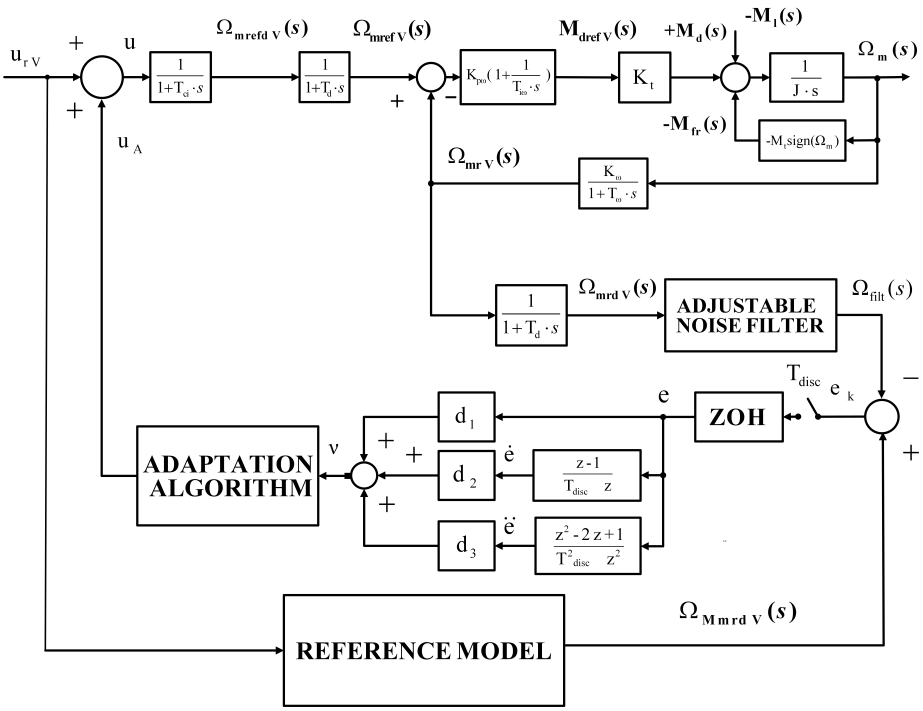

Fig. 3. Block diagram of the modified MRAC with signal adaptation.

has significant noise in measured rotation speed signal it is necessary to design satisfactory filter. The filter should be implemented in the microcontroller too. According to noise characteristic analyses the noise model is designed for simulation purposes.

B. Noise model design

Measured rotation speed signal of the PMSM drive contain significant noise. The results of the frequency analysis accomplished by Discrete Fourier Transform (DFT) are shown in Fig. 4.

The examination of the results shows the discrete noise frequencies proportional to the rotation speed of the PMSM drive. For simulation purposes, the noise model is designed. The characteristic of the model is to add noise signal of the same frequencies as the frequencies of the noise in the measured signal to the output signal of the PMSM drive model. The noise model is shown on Fig. 5.

C. Adjustable noise filter design

The frequency equivalent to the rotation speed is dominant. So it is reasonable to damp the dominant noise frequency and its first harmonic.

For damping other noise frequencies too, the higher order filter should be required, so in that case the filter will have higher influence to the transient response of the PMSM system. On the other hand, the dominant noise frequency depends on the rotation speed of the PMSM drive. So the filter of the following form is designed:

$$G_f(s) = \frac{\Omega_{filt}(s)}{\Omega_{mrdV}(s)} = \frac{1+T^2s^2}{1+4Ts+T^2s^2}, \qquad T = \frac{1}{2\pi f_0}, \tag{18}$$

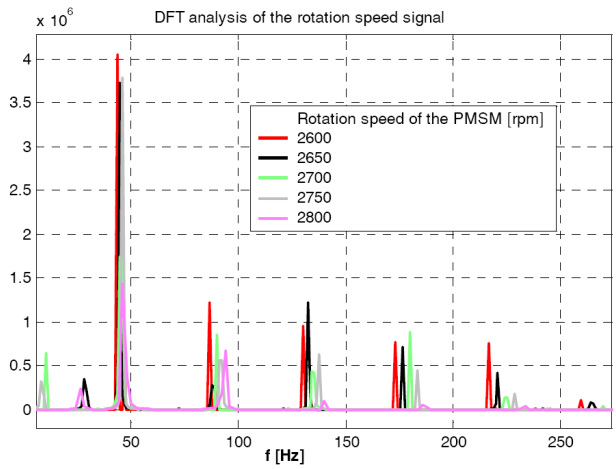

Fig. 4. DFT analyses of the rotation speed signals for several values of the rotation speed.

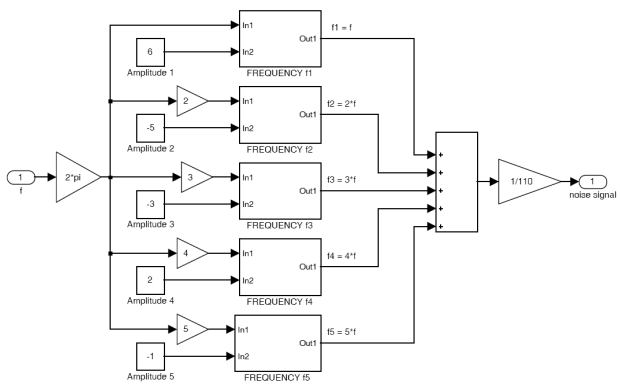

Fig. 5. The noise model.

where
$G_f(s)$ – transfer function of the filter,
f_0 – damping frequency of the filter, (Hz).

The damping frequency of the filter is function of the input signal. The filter block should have two inputs. The first input is the signal which should be filtered while the other input should determine the primary dumping frequency. The second input has to be equal to the rotation speed of the motor. As the noise filter should be part of the adaptive controller, the reference rotation speed signal will be used instead of the measured rotation speed signal. The model of the adjustable noise filter is shown on Fig. 6.

D. Optimization of the error weighting coefficients

Error weighting coefficient vector $\underline{d}$ (size 3×1) is determined by optimization based on integral absolute error (IAE) criterion:

$$I = \int |e(t)| dt, \tag{19}$$

where e is the difference between the reference model output and the filtered measured speed of the PMSM drive.

Optimization is carried out on the reference step change of 300 rpm and nominal moment of inertia. The optimization resulted in the following error weighting coefficient vector:

$$\underline{d}^T = \left[\begin{array}{ccc} 12.2837 & 0.1571 & 6 \cdot 10^{-4} \end{array} \right]. \tag{20}$$

The simulation responses of reference model output, filtered speed, error and adaptation signal, for PMSM drive with moments of inertia $J = J_n$, $J = 0.5J_n$, $J = 0.25J_n$, are shown on Fig. 7, 8 and 9, respectively.

Maximum error values for PMSM drive without adaptation e_m and with MRAC with signal adaptation algorithm $e_{m,adapt}$ are shown in Table III.

It is seen from Table III that maximum error values are smaller in the case of adaptive system than in the case of non-adaptive system. Errors have relatively large value bacause reference model is determined for the system without noise model. Also the overall system model is of sixth order and the reference model is a third order approximation.

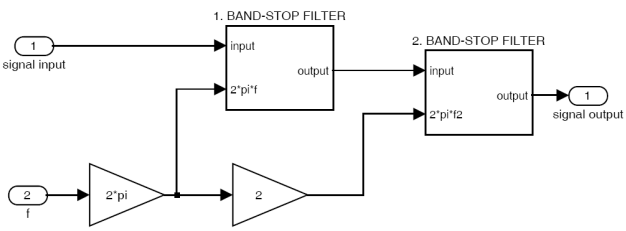

Fig. 6. The model of the adjustable noise filter.

TABLE III
MAXIMUM ERROR VALUES FOR PMSM DRIVE WITHOUT ADAPTATION e_m AND WITH MRAC WITH SIGNAL ADAPTATION ALGORITHM $e_{m,adapt}$.

J	e_m (%)	$e_{m,adapt}$ (%)
J_n	68.9	49.2
$0.5J_n$	62.8	42.7
$0.25J_n$	60.1	48.0

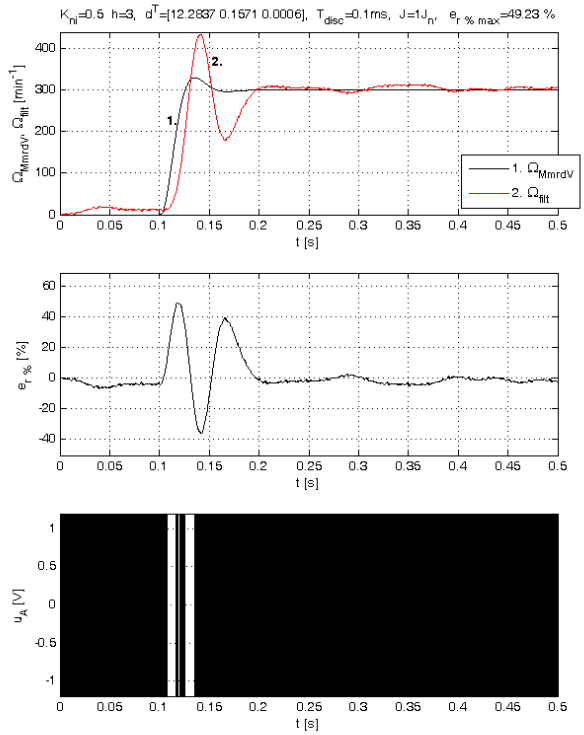

Fig. 7. The simulation responses of reference model output, filtered speed, error and adaptation signal, for PMSM drive with $J = J_n$.

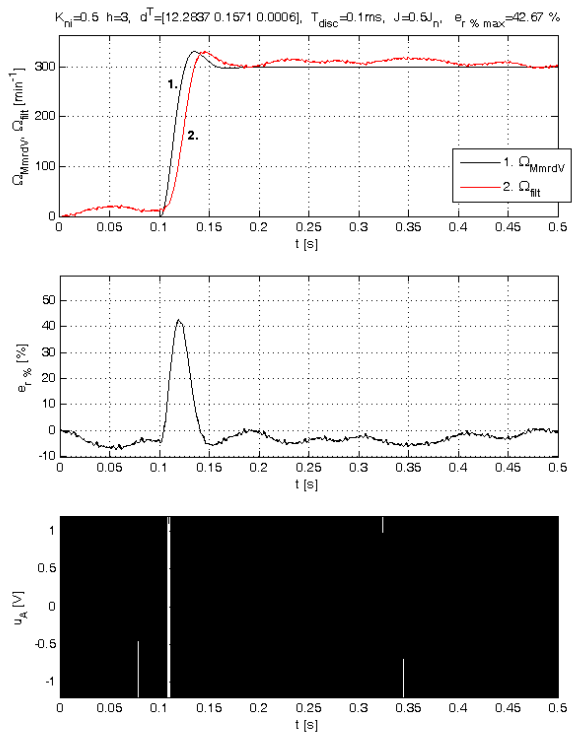

Fig. 8. The simulation responses of reference model output, filtered speed, error and adaptation signal, for PMSM drive with $J = 0.5J_n$.

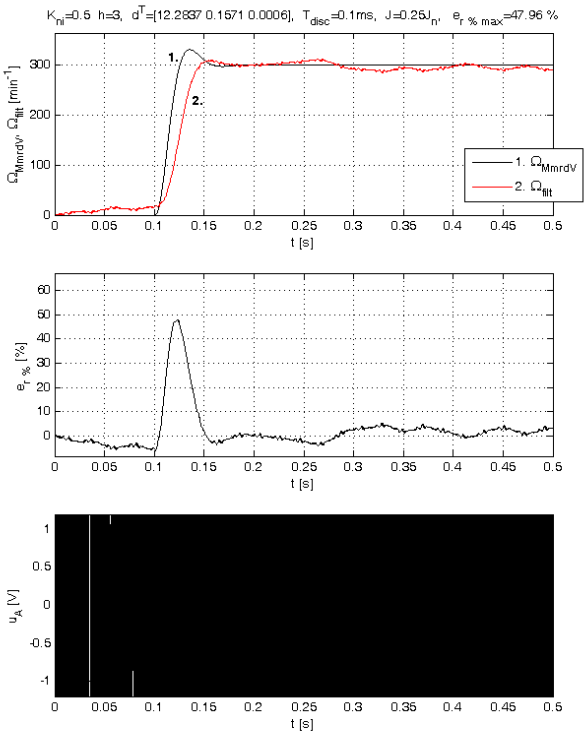

Fig. 9. The simulation responses of reference model output, filtered speed, error and adaptation signal, for PMSM drive with $J = 0.25J_n$.

IV. Conclusion

In this paper a mathematical model of a permanent magnet synchronous motor drive is described. The model parameters are determined based on the manufacturer's data and optimization based on experimental measurements on the drive.

Since the measurement noise is significant in the PMSM drive, a noise model is introduced which describes the real noise fairly well. Thus a complete PMSM drive model is obtained. The drive has a possibility of moment of inertia change, so the drive behavior is tested by model simulation using program package Matlab/Simulink for different moments of inertia.

Compensation of moment of inertia change is achieved by model reference adaptive control with modified signal adaptation algorithm. The algorithm is sensitive to the measurement noise so additional filtering of the measured signal had to be carried through. Since the measurement noise had two dominant frequencies in its specter, a filter with two stop bands for those frequencies is designed. In that way the influence of measurement noise to the adaptation algorithm is reduced, but not completely eliminated. It is shown that maximum error values for different moments of inertia are reduced by 12 – 20% in relation to the PMSM drive without adaptation.

The result achieved is good considering the noise/signal ratio. The authors are planning to investigate other ways of reducing the noise influence on the adaptation algorithm, e.g. different filtering tehniques or different choice of state space variables.

References

[1] R. Krishnan, *Electric Motor Drives; Modeling, Analysis and Control*, Prentice Hall, Inc, New Jersey, 2001.

[2] W. Leonhard, *Control of Electrical Drives*, Springer-Verlag, Berlin Heidelberg, 1996.

[3] J. Deur, "Servo system with vector controlled PMSM", *Ms. Theses*, Faculty of Electrical Engineering, Zagreb, 1993. (in Croatian)

[4] A. Mujanovic, P. Crnosija, Z. Ban, "Determination of transient error and signal adaptation algorithm coefficients in MRAS", *Proceedings of the IEEE International Symposium on Industrial Electronics, ISIE 99*, Maribor, p. 631-634, 1999.

[5] P. Crnosija, Z. Ban, R. Krishnan, "Application of Model Reference Adaptive Control With Signal Adaptation to PM Brushless DC Motor Drives", *Proceedings of the 2002 IEEE International Symposium on Industrial Electronics*, L'Aquila, p. 689-694, 2002.

[6] P. Crnosija, R. Krishnan, T. Bjazic, "Performance Optimization of PM Brushless DC Motor Drive with Reference Model and Signal Adaptation Controller" *Proceedings of the EDPE 2005*, Dubrovnik, p. 77, 2005.

[7] P. Crnosija, Z. Ban, "Implementation of Modified MRAC to Drives Control", *Proceeding of the 9th European Conference on Power Electronics and Applications*, Brussels, P.1-P.9, 2001.

[8] Matlab Help, *Optimization Toolbox, version 6.5*, The MathWorks Inc., 2002.

[9] M. Horvatic, "Parameter optimization of the MRAC algorithm with signal adaptation for servo system", Diploma theses, Faculty of Electrical Engineering and Computing, Zagreb, 2005. (in Croatian)

[10] K. J. Åstrom, *Adaptive control*, Addison-Wesley Publishing company, Reading, Massachusetts, 1989.

[11] H. Butler, *Model reference adaptive control - from theory to practice*, Prentice Hall, New York, 1992.

[12] V. Chalam, *Adaptive control systems - Techniques and Applications*, Marcel Dekker, Inc., New York and Basel, 1987.