Electrical properties of teeth regarding the electric vitality testing

T. Marjanović[1], Z. Stare[1] and M. Ranilović[1]

[1] University of Zagreb / Faculty of electrical engineering and computing, Zagreb, Croatia

Abstract— **In this paper we concentrate on electrical properties of tooth during electrical stimulation using various electrode-tooth interfaces. Established resistances of teeth connections are compared for each type of electrode. Total impedance as well as the voltage step response of tooth is recorded with different electrodes. The current stabilized pulp-tester is built and used to measure the required parameters of stimuli in order to obtain stable and comparable readings. For that purpose intensity-duration curve is recorded. Use of current and voltage stimuli by pulp-testers is reviewed.**

Keywords— **Tooth impedance, electric pulp vitality tester, intensity-duration curve of tooth, step response of tooth.**

I. Introduction

Pulp testing is used in endodontic diagnosis to determine the vitality degree of a pulp tissue. Testing is performed by an application of various stimuli. Heat and cold, electrical stimulation, palpation, percussion and tooth sleuth tests are commonly performed to determine if the tooth is alive [1]. During electrical pulp testing, electric stimuli are applied with increasing strength until the sensation is reached. No response from the tooth generally indicates the tooth has died and needs the root canal therapy or removal. A very quick response compared to the adjacent teeth generally indicates that the tooth is inflamed and probably is heading toward pulp death. If it responds the same as the other teeth then it is considered to be healthy [2].

Monopolar and bipolar electrical stimulation techniques are possible. At monopolar technique an active electrode is placed on the surface of tooth and the current flows through the body up to the neutral electrode. At bipolar both electrodes are placed on the tooth. Bipolar technique offers no significant advantage and it is less feasible, so monopolar is commonly used [3].

Electrical stimuli can be voltage or current pulses with different shape, duration and repetition frequency [1]. Voltage pulses are generally inappropriate for pulp stimulation due to the high electrode-tooth and tooth resistances. That could lead to a large variation of measurement results. Threshold for current stimuli on vital teeth is in the range of 1 to 50 μA. If the threshold is reached above 150 μA pulp vitality should be suspected. Larger current can stimulate periodontal nerves instead of the pulp which could lead to misinterpretation of vitality [3]. It is a shame to observe that even today many devices offered by renowned manufacturers uses inconsistent stimuli and display results in incomparable and arbitrary units, or even only in positive or negative assessment [4]. Some devices do not even have adequate neutral electrode and return current flows through the dentist hand, so readings strongly depend on rubber gloves worn by dentist [5, 6].

If the measurements are going to be compared, it is important to understand the influence of various kinds of electrodes and to define parameters for voltage or current stimuli.

II. Materials and methods

Four experiments have been performed and during those were measured: resistances at DC, impedances, voltage step responses and intensity-duration curves by using the custom made automated pulp-tester, Fig. 1.

In the first experiment were measured teeth resistances at DC for different types of tooth-electrode contact. Measurements were performed on 56 different teeth of 14 volunteers (age 22 to 28). We have used stainless steel electrodes with rounded tip and conductive rubber electrodes, 2 and 4 mm in diameter each. Electrodes were used dry, moistened with tap water or applied with an electro-conductive gel on top. A current-limited voltage source was used for measurement. Positive active electrode was applied at the middle third of the facial surface of teeth with intact enamel. Large area

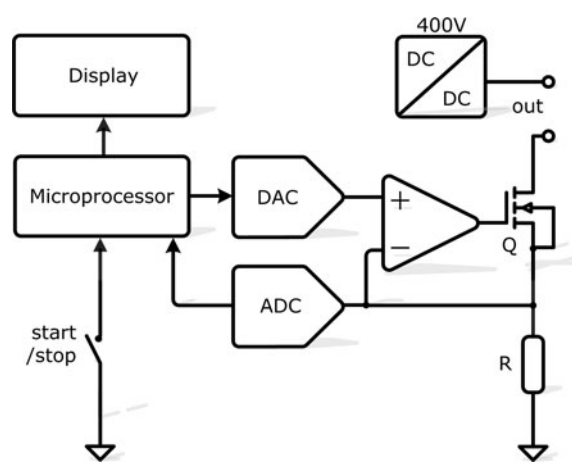

Fig. 1 A block diagram of built current stabilized pulp-tester

P.D. Bamidis and N. Pallikarakis (Eds.): MEDICON 2010, IFMBE Proceedings 29, pp. 391–394, 2010.
www.springerlink.com

neutral electrode was held in hand and return current was measured. Each tooth was dried with a towel and blown out with the air prior the experiment.

In the second experiment were measured impedances of teeth with various types of electrode-tooth contact. Measurements were performed on 9 teeth of 3 volunteers. Impedances were measured using the Hewlett Packard HP4284A precise RLC meter controlled by a personal computer. Impedances were recorded at 8 frequencies in the range of 40 Hz to 100 kHz using the 1V AC stimuli.

Within the third experiment we recorded response of tooth on voltage step using different types of electrodes. Positive voltage pulses 10V in amplitude were applied to the tooth and return current was measured by using digital oscilloscope.

During the fourth experiment intensity-duration *(I-T_D)* curves were measured. For that purpose the current stabilized automated pulp-tester was made, Fig. 1. Microprocessor was programmed to generate the ascending sequence of current pulses in the range of 1 to 250 µA until the sensation is achieved and button is pressed. Each time when button is pressed sequence restarts using different pulse duration. The intensity-duration curve was measured on frontal teeth for 9 subjects.

Maximal repetition frequency of current pulses was determined prior the forth experiment and kept low during the experiment. For measuring the maximal repetition frequency the microprocessor was reprogrammed to increase repetition each time button is pressed and pulse sequence restarted, while keeping pulse duration long and constant.

III. Results

Mean DC resistance of tooth with each type of electrode contact is drawn as a single point on Fig. 2. Range of obtained values (96% of occasions) is drawn as an error bar around that point. Labels used on following figures are defined in Table 1.

Table 1 Definition of used labels.

LABEL	electrode material	diameter	electrolyte
M2D	stainless steel	2 mm	dry electrode
M2V	stainless steel	2 mm	tap water
M2G	stainless steel	2 mm	conductive gel
M4D	stainless steel	4 mm	dry electrode
M4V	stainless steel	4 mm	tap water
M4G	stainless steel	4 mm	conductive gel
R2D	conductive rubber	2 mm	dry electrode
R2V	conductive rubber	2 mm	tap water
R2G	conductive rubber	2 mm	conductive gel
R4D	conductive rubber	4 mm	dry electrode
R4V	conductive rubber	4 mm	tap water
R4G	conductive rubber	4 mm	conductive gel

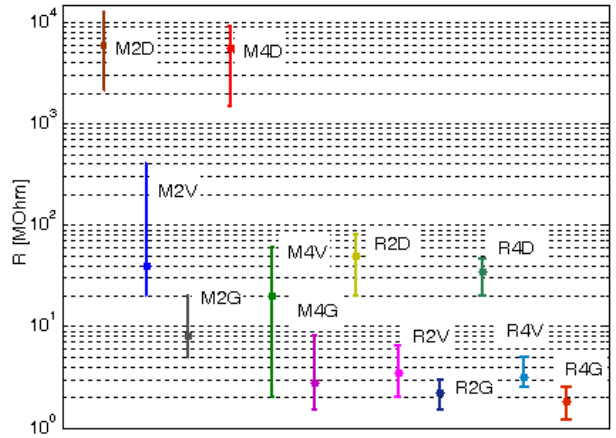

Fig. 2 Resistances of healthy teeth with intact enamel contacted with different types of electrodes

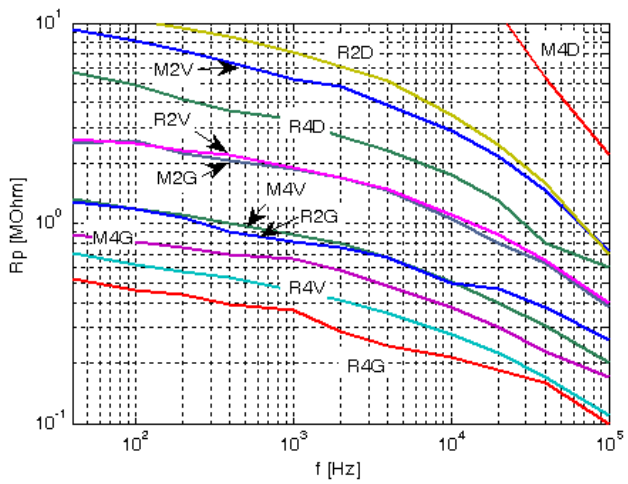

Fig. 3 Frequency dependence of *Rp* for different electrode types

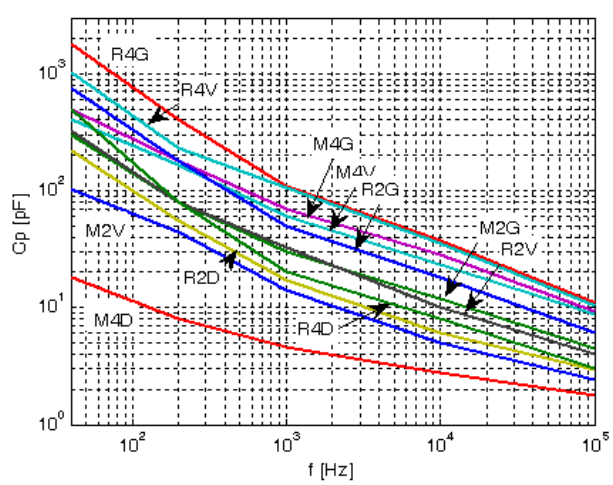

Fig. 4 Frequency dependence of *Cp* for different electrode types

Resistances are measured with 10V applied to the active electrode, except for M2D and M4D when the value of 100V was used.

Impedances of tooth with tooth-electrode contact were interpreted as a parallel of resistance *(Rp)* and capacitance *(Cp)* for each frequency. Values of *Rp* and *Cp* for each type of electrode were averaged for all teeth and the results are shown on Fig. 3 and 4.

Pulse response of tooth for each type of electrode is shown on Fig. 5. The current was measured as a response to 10 V pulses of 2 ms wide, but normalized on Fig. 5 to represent response to 1 V voltage step.

Figures 3 to 5 lack the values of M2D because stabile measurements could not be obtained due to the large value of electrode impedance. Figure 5 also lack the values of M4D for the same reason.

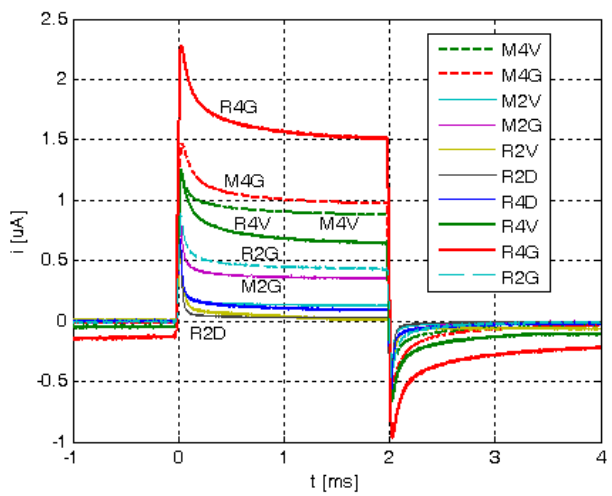

Fig. 5 Pulse response of tooth for different types of electrode

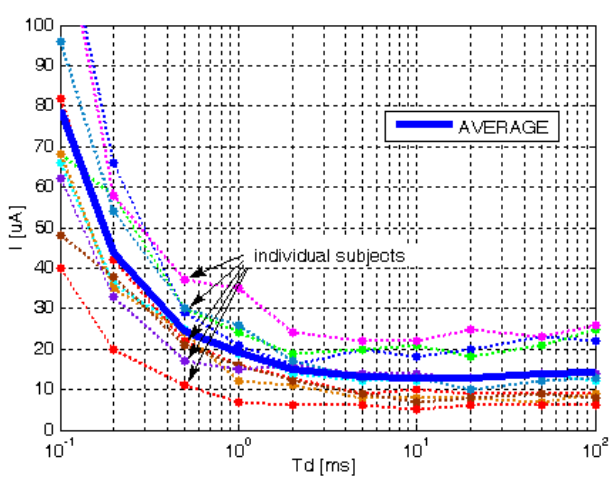

Fig. 6 Intensity-duration curves of frontal teeth

Fig. 6 shows the intensity-duration curves of frontal teeth for each examined subject and the averaged I-T_D curve.

Curves were measured with 200 ms pause between pulses since it was determined to be slow enough not to influence the results. Examiners felt increased sensation of 10 ms current pulses for repetition below 100 to 150 ms.

IV. Discussion

Fig. 2 shows that the electrode made of 2 mm stainless steel moistened with tap water has questionable performances regarding the quality and repeatability of realized connection. This type of electrodes is most commonly in use [7]. Even the large (4 mm) wet metal electrode realized a relatively poor contact. We recommend using conductive gel with metal electrodes. Performance of conductive rubber electrodes also increases significantly when moistened or applied with a conductive gel.

During DC resistance measurements we noticed voltage dependency of resistance up to 0.5 %/V.

Conductivity of tooth with applied active electrode increases at higher frequencies for each type of electrode as seen on Fig. 3. With addition of *Cp* (Fig. 4), that leads to a stronger contact at the beginning and at the end of stimuli pulses. Phenomenon can be seen on Fig. 5, where higher current is detected at the beginning of voltage stimuli.

Both *Rp* and *Cp* strongly depend on the used electrodes. In the case of voltage regulated pulp-testers, pulse rise and fall times should be limited to about 0.3 ms to avoid premature stimuli sensation. Pulses shorter than a few milliseconds are not recommended due to a high dependency of their shape with the transient response of used electrode. In the case of voltage controlled pulp-testers the problem of resistance volatility and dependency on used electrodes remains even if the transient is avoided. Since the sensation depends on current amplitude and on the pulse duration, current must be detected and indicated when voltage stimuli are used. Applied voltage should be calibrated at least on the first applied pulse to compensate for electrode resistance. However, better results can be achieved if the current is monitored constantly.

While I-T_D curves were measured using the built current controlled pulp-tester (Fig. 1) results showed no significant dependency on used electrode as long as impedance was low enough to conduct desired current due to a 400V source. If the current could not be achieved, analog to digital converter (ADC on Fig. 1) would report low amplitude to the processor and the measurement should be aborted. We revealed that a 400V source is high enough to manage

currents up to 250 μA for M2G, M4G, R2V, R2G, R4V and R4G electrodes in most cases. If M4V, M2V, R4D or R2D electrode is used on a tooth with intact enamel, measurement could be limited to low currents only. Therefore undercurrent signalization must be implemented in pulp-testers, especially if lower voltage is used for stimulation (e.g. 270 V in [3]). In the case of dry metal electrode (M2D and M4D) not even a few microamperes could be reached when using 400 V source in most cases.

Fig. 6 shows that the pulse duration for correct rheobase measurement on frontal teeth should be at least 5 ms with the minimally 200 ms between pulses. Unfortunately, many of pulp-testers offered on the market do not comply with the stated requirements [8].

During measurements we have also concluded that output stage of current-stabilized pulp-tester shown on Fig. 1 is inadequate for commercial use, not only due to potential hazard in the case of fused transistor Q but also because of large parasitic capacitance of Q. If the voltage on Q is low during the initial contact on the tooth, subject could sense a shock while output capacitance of Q charges. We have observed that even less than 10 pF can be felt as a shock when charging instantly to 400V. Initial output capacitance of high-voltage low-leakage FET could be 200 pF or more when the drain voltage is low. At higher drain voltages, capacitance reduces significantly, however a charge of a few nC has to flow through the tooth until the drain voltage has increased. This charge could be enough for the patient to feel pain. Additional circuitry must be embedded to recharge all parasitic capacitances to high voltage each time a current pulse finishes. Otherwise, if electrode is momentarily disconnected during the measurement, current pulse would discharge the parasitic capacitances and when electrode reconnects, shock could be sensed no matter if the next current pulse is generated or not.

In case of voltage controlled pulp testers, no electric shock could be felt due to parasitic capacitances in the case of loose electrode contact during the measurement.

V. Conclusions

To measure rheobase correctly pulp-testers should generate stimuli pulses of at least 5 ms wide, with a repetition period no shorter than 200 ms.

If voltage stimuli are going to be used, current must be detected and indicated in order to generate stable and comparable readings. Rising and falling edges of voltage stimuli should be limited to about 0.3 ms. Short voltage pulses (e.g. less than a millisecond) can not provide repetitive measurements due to variability of electrode impedances. Unfortunately many pulp-testers offered on the market do not satisfy any of these terms.

In the case of current stabilized pulp-tester we realized that the output stage, as shown on Fig. 1, is inadequate for commercial purposes. There is a potential hazard if transistor is fused and a possible electrical shock caused by charging of parasitic capacitance of the output transistor.

Most commonly used metal electrode, 2 mm in diameter, moistened with tap water will not always accomplish sufficient contact on the tooth. Pulp-testers must have implemented undercurrent signalization.

References

1. Lin J, Chandler NP (2008) Electric pulp testing: a review. Int. Endod. J. 41:365-374, DOI: 10.1111/j.1365-2591.2008.01375.x
2. Ahlquist ML, Edwall LGA, Franzén OG et al (1984) Perception of pulpal pain as a function of intradental nerve activity. Pain 19:353-366, DOI: 10.1016/0304-3959(84)90081-2
3. Pepper MG, Smith DC (1981) An electric tooth pulp vitality tester. Med. Bio. Eng. & Comp. 9:208-214, DOI: 10.1007/BF02442716
4. Wang IW, Young ST (1996) An improved electric pulp tester. IEEE Eng. Med. Biol. Mag. 15:112-115, DOI: 10.1109/51.482851
5. Cailleteau JG, Ludington JR (1989) Using the electric pulp tester with gloves: a simplified approach. J Endod. 15:80-81. PMID: 2607273, DOI: 10.1016/S0099-2399(89)80113
6. Myers JW (1998) Demonstration of a possible source of error with an electric pulp tester. J. Endod. 24:199-200, PMID: 9558588, DOI:10.1016/S0099-2399(98)80184-2
7. Daskalov I, Indjov B, Mudrov M (1997) Electrical dental pulp testing. Defining parameters for proper instrumentation. IEEE Eng. Med. Biol. Mag. 16:46-50, DOI: 10.1109/51.566152
8. Dummer PMH, Tanner M, McCarthy JP (1986) A laboratory study of four electric pulp testers. Int. Endod. J. 19:161-71. DOI: 10.1111/j.1365-2591.1986.tb00472.x

Author: Tihomir Marjanović

Institute: Faculty of electrical engineering and computing
Street: Unska 3
City: Zagreb
Country: Croatia
Email: tihomir.marjanovic@fer.hr