ISSN 0005–1144
ATKAAF 42(1–2), 71–76 (2001)

Željko Jakopović, Viktor Šunde, Zvonko Benčić

Electro-Thermal Modelling and Simulation of a Power-MOSFET

UDK 621.382.32.022
IFAC IA 3.2.3

Original scientific paper

Electro-thermal simulation of power electronic semiconductors is now required in accurate optimisation of power electronic circuits and systems. This requires accurate, but not too complex, electro-thermal models of power semiconductors to be used in commercially available power electronic circuit simulators. Realization of one such electro-thermal model for power MOSFET in IsSpice is described in the paper. Model consists of electrical and thermal part with interactive exchange of variables. Electro-thermal model was tested on real circuit example.

Key words: electro-thermal simulation, modelling, power MOSFET

1. INTRODUCTION

Optimisation of power electronic′s thermal system is today as well important as electrical optimisation. Power electronics engineer need to know electrical and thermal properties of power electronics system, as well as their interaction. Until last few years no low- and mid-range circuit simulators are reported with possibilities of providing electro-thermal simulation, based on relatively simple electro-thermal models of power electronics components. Simulation was performed at fixed, static temperature. But this is not enough for good predicting of power semiconductor′s behaviour. Many properties of semiconductors are strongly temperature dependent, thus making the temperature one of the critical parameters for system′s behaviour.

For the power semiconductor′s long lifetime and reliability both maximum junction temperature and temperature cycling are important. Junction temperature influences on many component parameters and exceeding of maximum junction temperature can lead to fatal errors or permanent damage of the component. Strong temperature cycling of power semiconductor can lead to mechanical stress in the component, especially at solder and bond connections. Some authors report strongly nonlinear dependence of component′s lifetime on temperature cycling. Until the introduction of electro-thermal simulation, calculation of junction temperature was performed by approximate method, i.e. using transient thermal impedance diagram (TTIC or z_{th}) given in catalogues (data sheets). The use of electro-thermal models of power semiconductor enables fast and accurate simulation of power electronics system behaviour. Each power semiconductor can be electro-thermally modelled, but power MOSFET was chosen because some of it′s parameters are strongly temperature dependent and extremely important for MOSFET′s behaviour in power electronics circuit.

2. BASIC IDEA OF ELECTRO-THERMAL MODELLING

Electrical models of all power semiconductors, from simple to complicated ones, are well defined and used in circuit simulators for power electronics. In equations describing the semiconductor′s behaviour fixed junctions temperature T_J should be replaced in some way with variable $T_J(t)$ junction temperature obtained as a response on semiconductor′s power loading. Thermal models of power semiconductor exist in the variety of forms and complexity. It was shown that even simple ladder network (RC) thermal models of power semiconductors based on electro-thermal analogy, can give satisfactory result if properly used [1]. Figure 1 shows the basic idea of electro-thermal modelling. Modified electrical model of power semiconductor is used with some parameters temperature dependent. In power MOSFET case, these are: drain resistance $R_D(T_J)$, threshold voltage $U_{TH}(T_J)$ and electron mobility in channel region $\mu(T_J)$.

Ladder network thermal model, consisting of several (R_{th}, C_{th}) pairs is used for calculation of junction temperature T_J. Input for this network is instantaneous power $p(t)$ dissipated in power MOSFET and calculated as a product of MOSFET′s instantaneous current and voltage ($i_D * u_{DS}$), obtained by means of electrical model. Direct interaction of electrical and thermal system can be seen.

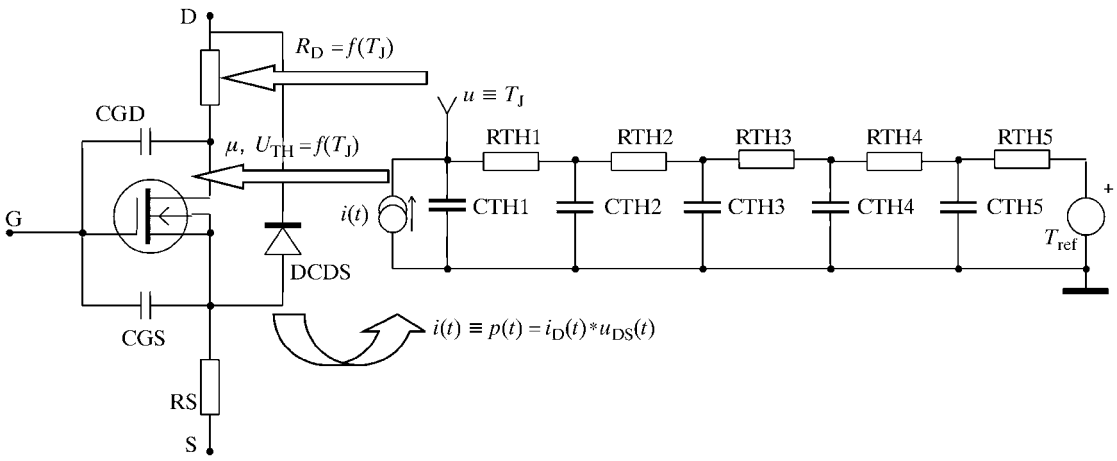

Fig. 1 Principle of electro-thermal modelling

It is important to say that great care should be given to the parameters of the thermal model. For simple structures, thermal equivalent elements (R_{th}, C_{th}) can be obtained from the physical structure [2], but much better way is measurement of TTIC curve and identification of equivalent thermal parameters [3].

3. ELECTRO-THERMAL MODEL OF POWER MOSFET

To develop the electro-thermal model an electric simulator from the *SPICE* programme family was used. It is an *IsSpice4* software package [4].

The electric model of MOSFET used to calculate the time course of voltage and current, respectively instantaneus power, has a subcircuit structure, Figure 2.a), [5].

Static characteristics in the linear region and in the saturation region were modelled with an in-built model of the signal MOSFET M_1, respectively model LEVEL=3. This model takes into consideration the short and narrow channel effects on the electron mobility in the channel and on threshold voltage.

Dynamic characteristics of power MOSFET were modelled with a network of a passive components and voltage-controlled switches.

Temperature dependence of the electric model parameters was reduced to electron mobility in channel μ, drain resistance R_D, threshold voltage U_{TH} and breakdown voltage $U_{BR(DSS)}$. As in the existing *SPICE* model LEVEL=3 temperature is not a system variable, a program command has excluded the in-built temperature dependences of the model's electric parameters.

The system's thermal model is the known electric ladder network, Figure 2.b). Applying this model requires a knowledge of conditions for the existence and of the limits on the use of power MOSFET's transient thermal impedance [1]. A current-dependent voltage source H_1 and voltage-dependent voltage source E_1 convert the time course of current $i_D(t)$ and voltage $u_{DS}(t)$ to the instantaneus power $p(t)$. Current of the voltage-dependent current source G_1 is analogous to the instantaneus power.

The dependence of electron mobility in the channel on temperature T is described by equation [6]:

$$\mu T = \mu(T_{ref})\left(\frac{T_{ref}}{T}\right) \tag{1}$$

where:

T_{ref} is referential temperature
μ is constant between 1,5 i 2

The model of temperature-dependence electron mobility was incorporated by using nonlinear current sources B_1 i B_2. Current from source B_1 is equal to the product of current through MOSFET M_1 and factor $(T_{ref}/T)^m$. Current of the current source B_2 is equal to the current through MOSFET M_1 and it has opposite direction. T_{ref} and m are incorporated in current source B_1 as constants. T is the controlling variable of the current source and analogous to the input voltage in the model of the semiconductor thermal system.

Temperature dependence of drain resistance is described by equation [7]:

$$R_D(T) = R_D(T_{ref})\left(1 + \frac{\alpha}{100}\right)^{T - T_{ref}} \tag{2}$$

α is a constant between 0,6 and 0,9. The model of temperature-dependence drain resistance was incorporated by using a nonlinear B-source. Output resistance of this source is function of input voltage [4]. This source was, as resistance $R_D(T_J)$, serially connected with the model of a signal MOSFET M_1.

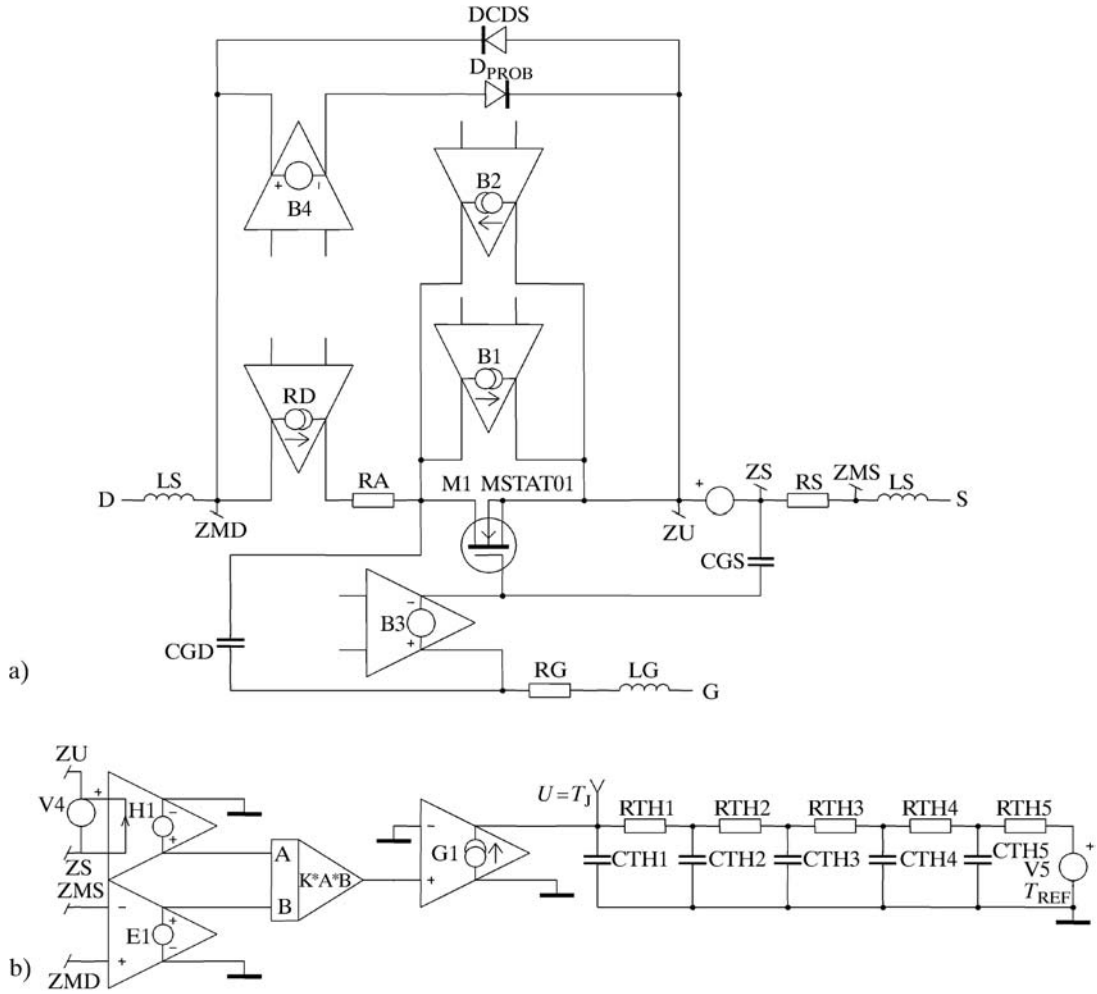

Fig. 2 Scheme of a developed electro-thermal model: a) electric model, b) thermal system model

T_{ref}, α and $R_D(T_{ref})$ were incorporated in the source as constants. T is the controlling variable of this source and is analogous to the input voltage in the model of semiconductor's thermal system.

Temperature dependence of threshold voltage is described by equation [7]:

$$U_{TH}(T) = U_{TH}(T_{ref}) - m_1(T - T_{ref}) \tag{3}$$

m_1 is constant between 0,5 i 4 mV/K. The model of temperature-dependence threshod voltage was incorporated by using a nonlinear voltage-dependent voltage source B_3. Its value is described by equation:

$$U_{B3} = m_1(T - T_{ref}) \tag{4}$$

m_1 and T_{ref} were incorporated in voltage source B_3 as constants. T is the controlling variable of this voltage source and is analogous to the input voltage in the model of semiconductor's thermal system.

Temperature dependence of breakdown voltage is described by equation [6]:

$$U_{BR(DSS)}(T) = \\ = U_{BR(DSS)}(T_{ref}) + T_{C1}(T - T_{ref}) + T_{C2}(T - T_{ref})^2 \tag{5}$$

T_{C1} i T_{C2} are temperature coefficients. The model of temperature-dependence breakdown voltage was incorporated by using a nonlinear voltage-dependent voltage source B_4 and diode D_{PROB}. At room temperature, the voltage of voltage source B_4 corresponds to the breakdown voltage reduced by the voltage drop at a forward polarized diode D_{PROB}. T_{ref}, T_{C1} i T_{C2} were incorporated in voltage source B_4 as constants. T is the controlling variable of the voltage source and is analogous to the input voltage in the model of semiconductor's thermal system.

4. EXTRACTION OF MODEL PARAMETERS

Parameters of the electro-thermal model of power MOSFET are parameters of the electric and those of the thermal model.

The electric model has these parameters:
- parameters of static characteristics
- parameters short and narrow channel effects
- parameters of temperature dependence
- parameters of dynamic characteristics.

Recently, for use in *SPICE* family simulators some power MOSFET manufacturers [8] provide in their catalogues parameters of static characteristics as well as short and narrow channel effect parameters, namely model LEVEL=3 parameters. If not given, they should be calculated from either measured or catalogue characteristics of a MOSFET.

Where technological process is unknown, the calculation process for electric model parameters needs some simplifications. With regard to the size of MOSFET, values of the effective width and length of the channel (W, L) are assumed to be equal to 2 μm. In this case transconductance parameter K_p equals current coefficient β.

Static characteristic parameters are current coefficient $\beta(K_P)$, threshold voltage U_{TH}, mobility modulation parameter θ, parasitic serial resistances R_D, R_A and R_S. The values of these parameters are determined from transfer characteristic $I_D = f(U_{GS})$ in the linear region or in the saturation region [5].

Most parameters of the short and narrow channel effects are roughly equal to zero due to the vertical structure of power MOSFET. The body-effect parameter γ is equal to zero because of the short circuit between the source and bulk of the power MOSFET. The static feedback on threshold voltage parameter η is equal to zero because expansion of depleted area beneath the drain into drift area instead into channel. Field factor in saturation κ is equal to zero because of the assumption that the saturation of current I_D is caused by the saturation of drift velocity of carriers, not by pinch-off. The maximum drift velocity of carriers v_{max} is determined by comparing simulated output characteristic with catalogue output characteristic [9]. Width effect on threshold voltage parameter δ is also determined by comparing the simulated transfer characteristic with the catalogue or measured transfer characteristic. In determining simulated transfer characteristics, a model of conduction power losses with all predetermined parameter values is used. Parameter values are modified until a satisfactory agreement between simulated and catalogue characteristics is obtained.

The parameters of temperature dependence are coefficients in the voltage-dependent voltage and voltage-dependent current sources from Figure 2.

The value of coefficient m_1 from the model of the temperature dependence of threshold voltage is equal to the slant of the catalogue dependence curve of threshold voltage on temperature [10].

The value of coefficient α from the model of temperature dependence of drain resistance is determined by comparing a simulated drain resistance characteristic with a catalogue characteristic of the same type. The value of the coefficient is modified until a satisfactory agreement between the simulated and measured transfer characteristics is obtained. At reference temperature drain resistance $R_{DS(on)}(T_{ref})$ is equal to the predetermined serial resistance R_D.

The value of coefficient m from the model of electron mobility temperature dependence is determined only after coefficient values the remaining model of parameter temperature dependencies have been found. Coefficient m is determined by comparing the simulated transfer characteristic with the measured transfer characteristic. As the initial coefficient for m empirical values between 1.5 – 2 are taken.

The value of $U_{BR(DSS)}(T_{ref})$ from the model of temperature-dependence breakdown voltage is the catalogue data. Coefficient values T_{C1} and T_{C2} for this model are calculated from the catalogue curve slant for the dependence of breakdown voltage $U_{BR(DSS)}$ on temperature.

Dynamic characteristic parameters are parasitic inductances and parameters of the model of parasitic nonlinear capacities. The values used as parasitic inductance L_S, L_D and L_G are mostly empirical. To calculate parameter values of capacity models C_{GD}, C_{GS} and C_{DS} one uses catalogue curves of the dependence of input capacity C_{iss}, output capacity C_{oss} and transfer capacity C_{rss} on voltages between source, drain and gate. Also needed are curves at positive and negative voltage values U_{DG}. Parameters of the thermal system model are equivalent electric resistances and capacities from the electric model, Figure 2.b). In calculating the values of these resistances and capacities the numerical procedure [3] used involves either catalogue or measured curves of transient thermal impedance of a power MOSFET.

5. SIMULATION AND MEASUREMENT

A developed electro-thermal model was tested by simulating and measurement the behaviour of MOSFET under different operating conditions, short circuit, active operating region and different types of combined losses, consisting of switching and conduction losses. The most interesting operating conditions for testing model accuracy are combined losses. In order to enhance the influence of switching losses at relatively low frequencies (10

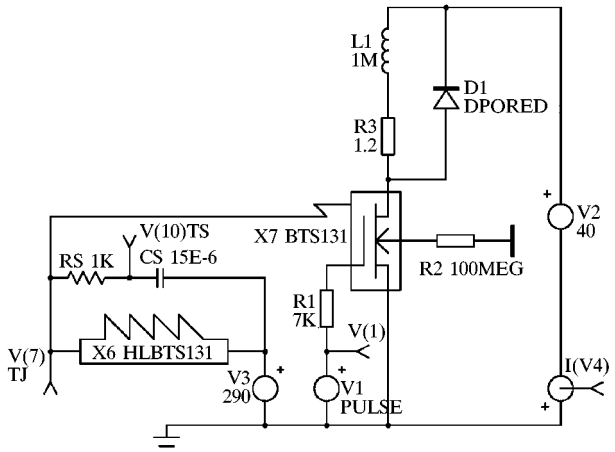

Fig. 3 Scheme of the test assembly for combined losses simulation and measurement

kHz), 7 kΩ gate resistance was added to slow down switching process. MOSFET was not kept fully opened during conduction interval, but with lowered gate voltage (near threshold voltage) MOSFET was held between saturation and active operating region. As a load, serial connection of resistance and inductance was used with freewheeling diode. Figure 3 illustrates the test assembly for simulations under combined losses condition.

Accuracy of simulation results depends on the electric and thermal models, their interaction, and on the accuracy with which their parameters have been determined. As the proof for the model and simulation accuracy, measurement method with independent temperature sensor should be used. As temperature indicator, TEMPFET was used, MOSFET with integrated overtemperature protection. Before the use, TEMPFET was calibrated to find out it's overtemperature protection reaction temperature. This critical temperature T_{crit}, was find out repeatable and very stable ($T_{crit} = 170$ °C at $T_{AMB} = 17$ °C). Also the TTIC (transient thermal impedance curve) for the device was measured. TTIC was measured with threshold voltage as TSEP and in active operation region during heating phase. This should give the worst case TTIC for examined TEMPFET. On the base of measured TTIC, appropriate thermal model of TEMPFET was build, as a simple, modified ladder RC model [1], with parameters identified on the base of it's TTIC. Measurements were done under same conditions as in simulation. The aim of simulation and measurement was to force TEMPFET to reach the critical temperature T_{crit}, when it's overtemperature protection reacts.

The simulation and measurement was done for TEMPFET BTS131, at a circuit voltage $U_D = 40$ V, load inductance $L_1 = 1$ mH, load resistance $R_1 = 1.2$ Ω and gate resistance $R_G = 7$ kΩ. To facilitate parameter setting and changing, the electro-thermal model is shown by means of two subcircuits. Subcircuit X_1 is the electric and subcircuit X_2 is the thermal part of this model. With a voltage source $V_3 = 288$ K the referential temperature was simulated. Resistance $R_2 = 100$ MΩ helps convergence during the simulation.

Simulation results are shown in Figures 4 and 5 TEMPFET's virtual junction temperature T_J and sensor temperature T_S were monitored. As the aim of simulation was to estimate the time interval needed for overtemperature protection work-out, time instant $t_{SIMcrit}$ at which T_S reaches 170 °C (443 K) was requested result, $t_{SIMcrit} = 500$ ms. Why T_S and not T_J was taken into account when estimating overtemperature protection work-out time?

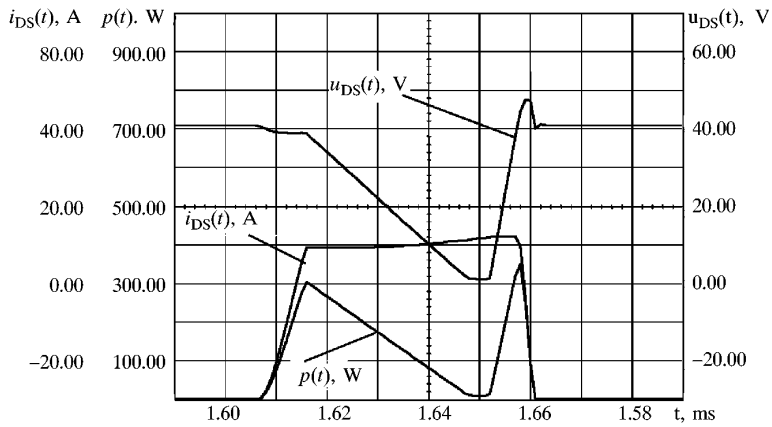

Fig. 4 Simulated characteristic TEMPFET's waveforms (current – 3, voltage – 2, power – 1) during two combined losses operating cycles using electro-thermal model

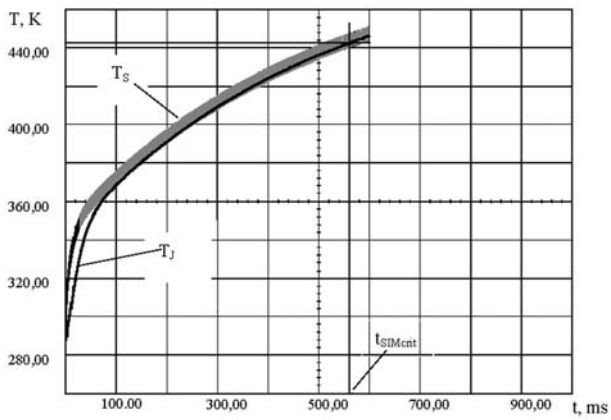

Fig. 5 Temperature simulation results for combined losses operating conditions by use of the electro-thermal model. Note the overtemperature protection work-out time $t_{SIMcrit}$ at $T_S = 443$ K

As TEMPFET's temperature sensor is mounted on the silicon surface, not inside MOSFET's structure, sensor's temperature is avereged and delayed virtual junction temperature. Overtemperature protection is based on temperature sensor information, so sensor's temperature T_S should be used instead of virtual junction temperature T_J.

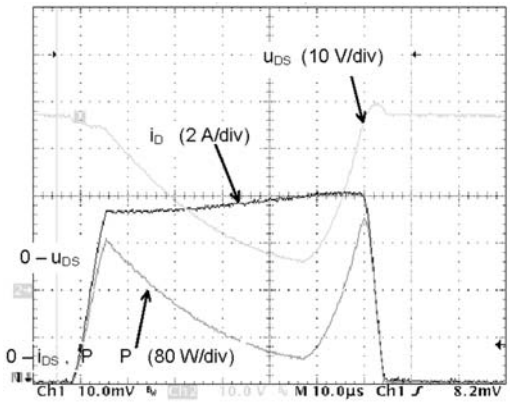

Fig. 6 Characteristic TEMPFET's waveforms during one combined losses operating cycle

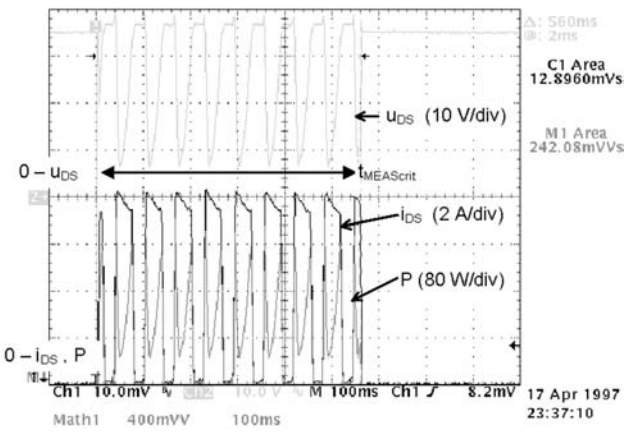

Fig. 7 Detection of overtemperature protection work-out time. TEMPFET turns off when protection works out

Illustrated in Figures 6 and 7 are measurement results in combined losses operating conditions. Figure 6. shows waveforms of TEMPFET's current, voltage and power dissipation during one period of combined losses cycle. Because of internal temperature rise in TEMPFET during operation, TEMPFET's parameters determining it's operation are changing. So waveforms on Figure 6 are valid only for a specific time instant. The change of average power during one combined losses cycle P_{AV} was between 75 W at the beginning of measurement and 85 W at the instant of overtemperature work-out.

On Figure 7 overtemperature protection reaction can be seen and measured. Voltage, current and power waveforms during experiment are not accurate due to the digital oscilloscope sampling nature, but the time instant of overtemperature protection work-out $t_{MEAScrit}$ can be clearly detected and measured, $t_{MEAScrit} = 560$ ms. This result is in excellent agreement with simulatively estimated $t_{SIMcrit}$ on Figure 5.

Such an agreement between simulated and measured results confirms that even simple thermal model, when properly implemented into electro-thermal model of power semiconductor, enables accurate electro-thermal simulation of power electronic circuits. As a consequence, such a thermal model of power MOSFET was implemented into SIMPLORER's semiconductors library under development, as a part of collaboration with SIMEC GmbH.

6. CONCLUSION

An idea of power MOSFET's electro-thermal modelling is described. By modification of built-in SPICE-like electrical model, adding simple ladder network model of MOSFET's thermal behaviour, relatively simple and accurate electro-thermal model of power MOSFET is obtained. Such a model can be succesfully used in most standard electrical circuit simulators for determining semiconductor's operating temperature during various operation cycles. Final verification was provided on the TEMPFET example, when overtemperature reaction time was measured and simulated for the same conditions. Good agreement of measured and simulated results confirms the expectations.

REFERENCES

[1] Ž. Jakopović, **Application Limits of Transient Thermal Impedance for MOS-gated Power Semiconductors.** PhD dissertation, Faculty of Electrical Engineering and Computing, Zagreb, 1997.

[2] P. Nance, M. Marz, **Thermal Modelling of Power Electronic System.** PCIM Europe, 2/2000, pp. 20–27.

[3] Z. Benčić, Ž. Jakopović, **Identification of Thermal Equivalent-Circuit Parameters for Semiconductors.** 2nd IEEE Workshop on Computers in Power Electronics, Bucknell University, USA, 6-7. August 1990., ISBN 0-87942-572-1, pp. 251–260.

[4] ..., **ICAP/4 IsSpice User's Guide.** Intusoft, 1996.

[5] V. Šunde, **Calculating the Losses in Power Transistors with the Field Effect to Determine their Current Loadability.** PhD dissertation, Faculty of Electrical Engineering and Computing, Zagreb, 1999.

[6] S. M. Sze, **Physics of Semiconductor Devices.** Second Edition, John Wiley&Sons, New York, 1981.

[7] ..., **SEMIKRON – Innovation and Service.**

[8] ..., **HEXFET Power MOSFET Designer's Manual**, Volume I – International Rectifier, 1993.

[9] P. Antogneti, G. Massobrio, **Semiconductor Device Modeling with SPICE.** McGraw-Hill Inc., 1988.

[10] ..., **Power MOS Devices Databook.** 2nd Edition, SGS-Thomson Microelectronics, July, 1992.

Elektrotoplinsko modeliranje i simulacija učinskog MOSFET-a. Za postizanje što bolje optimizacije sklopova i sustava energetske elektronike danas se zahtijeva elektrotoplinska simulacija učinskih poluvodičkih sklopki. Za to su potrebni točni, no ne i presloženi elektrotoplinski modeli učinskih poluvodičkih sklopki, pogodni za primjenu u tržišno dostupnim simulatorima sklopova energetske elektronike. U članku je prikazana IsSpice realizacija elektrotoplinskog modela učinskog MOSFET-a. Model se sastoji od električkog i toplinskog dijela koji međusobno izmjenjuju vrijednost varijabli. Elektrotoplinski model ispitan je mjerenjem na stvarnom sklopu.

Ključne riječi: elektrotoplinska simulacija, modeliranje, učinski MOSFET

AUTHORS' ADDRESSES:

Željko Jakopović
Viktor Šunde
Zvonko Benčić
Faculty of Electrical Engineering and Computing
Unska 3, Zagreb, Croatia

Received: 2001–10–05