LOW-SENSITIVITY ACTIVE-*RC* HIGH- AND BAND-PASS SECOND -ORDER SALLEN & KEY ALLPOLE FILTERS

Dražen Jurišić[1], George S. Moschytz[2] and Neven Mijat[1]

[1]Faculty of Electrical Engineering and Computing, Unska 3, Zagreb 10000, CROATIA

[2]Swiss Federal Institute of Technology Zuerich (ETH), Sternwartstr. 7, 8092 Zürich, SWITZERLAND

ABSTRACT

The design procedure of low-sensitivity, low-pass (LP) 2nd-and 3rd-order class-4 Sallen and Key active resistance-capacitance (*RC*) allpole filters, using impedance tapering, has already been published [1]. In this paper desensitization using impedance tapering is applied to HP and BP 2nd-order filters. It is shown that HP filters have dual properties to LP filters in the sense of sensitivity. Among various topologies of BP filters, the best topology is proposed. The sensitivity of a filter transfer function to component tolerances is examined using the Schoeffler sensitivity measure as a basis for comparison. Monte Carlo runs are performed as a double-check. The component values, selected for impedance tapering, account for the considerable decrease in sensitivities to component tolerances for the LP as well as for the HP and BP filters.

1. INTRODUCTION

A procedure for the design of class-4 Sallen-and-Key [2] low-sensitivity allpole filters was presented in [1]. The class-4 filter circuit has an *RC*-ladder network in the positive feedback loop [3]. The design procedure in [1] is based on "impedance tapering". It was shown that by the use of impedance tapering, in which L-sections of the *RC* network are successively impedance scaled upwards, from the driving source to the positive amplifier input, the sensitivity of the filter characteristics to component tolerances can be significantly decreased. In this paper we apply impedance tapering to HP and BP filters [4], [5], and we show that this extension follows the same principles as in the LP case.

2. DEFINITION OF SENSITIVITY

The relative sensitivity of a function $F(x)$ to variations of a variable x is defined as

$$S_x^{F(x)} = \frac{dF/F}{dx/x} = \frac{dF(x)}{dx}\frac{x}{F(x)} = \frac{d[\ln F(x)]}{d[\ln x]}. \qquad (1)$$

Consider the general transfer function $T(s)$ of a nth-order, allpole filter expressed in terms of coefficients a_i

$$T(s) = \frac{N(s)}{D(s)} = \frac{Kb_k s^k}{a_n s^n + a_{n-1}s^{n-1} + \ldots + a_i s^i + \ldots + a_1 s + a_0}. \qquad (2)$$

The transfer function $T(s)$ in (2) has no finite zeros, i.e. it has n zeros at infinity (k=0) for LP filter, k-fold zero at the origin (k=n/2) for a BP filter, or k=n for an HP filter.

The relative change of $T(s)$ to the variation of its coefficients a_i is

$$\frac{\Delta T(s)}{T(s)} = \sum_{i=0}^{n} S_{a_i}^{T(s)} \frac{\Delta a_i}{a_i}, \qquad (3)$$

where $S_{a_i}^{T(s)}$ is the *sensitivity to coefficient variations*. It was shown in [1] that the variation of the amplitude response $\alpha(\omega)$ is given by

$$\Delta\alpha(\omega) = \sum_{i=0}^{n} \mathrm{Re}\left[S_{a_i}^{T(s)}\right]_{s=j\omega} \frac{\Delta a_i}{a_i} = \sum_{i=0}^{n} f_i(\omega)\frac{\Delta a_i}{a_i}. \qquad (4)$$

The coefficient variation is given by

$$\frac{\Delta a_i}{a_i} = \sum_{\mu=1}^{r} S_{R_\mu}^{a_i}\frac{\Delta R_\mu}{R_\mu} + \sum_{\nu=1}^{c} S_{C_\nu}^{a_i}\frac{\Delta C_\nu}{C_\nu} + S_\beta^{a_i}\frac{\Delta\beta}{\beta}, \qquad (5)$$

where R_μ are resistors, C_ν capacitors and β the feedback gain of an operational amplifier. The terms $S_x^{a_i}$ represent the *coefficient-to-component sensitivities*.

The magnitude $|T(j\omega)|$ of the filter transfer function $T(s)$ in (2), is a function of frequency ω. It depends on the values of the coefficients a_i of the polynomial $D(s)$. The functions $f_i(\omega)$ in (4), represent *sensitivities to coefficient variations*. They depend only on the value of the coefficients a_i and frequency ω. Because, the LP, HP and BP transfer functions $T(s)$ in (2) have the same denominator $D(s)$, and different numerators $N(s)$, the functions $f_i(\omega)$, differ only in a constant, for each case. This can be readily shown using the rule:

$$S_x^{N/D} = S_x^N - S_x^D. \qquad (6)$$

As a consequence, the conclusions from the LP filter magnitude's *sensitivities to coefficient variations* can be extended to HP and BP filters, i.e. the amplitude sensitivity is proportional to the pole Qs, meaning that the higher pole Qs results by higher sensitivities. Since the high-order filters have higher pole-Qs, the general rule should be to design filters with as low ripple and as low order as consistent with the filter specifications.

Table 1. Sensitivities of a_1 to component variations of a 2nd-order class-4 HP filter.

x	$-(1/q_p)\cdot S_x^{a_1}$	
R_1	$-\sqrt{\frac{R_2C_2}{R_1C_1}}(\beta-1)$	$-\sqrt{\frac{r}{\rho}}\cdot(\beta-1)$
R_2	$\sqrt{\frac{R_1C_1}{R_2C_2}}+\sqrt{\frac{R_1C_2}{R_2C_1}}$	$\sqrt{\frac{\rho}{r}}+\frac{1}{\sqrt{r\rho}}$
C_1	$\sqrt{\frac{R_1C_2}{R_2C_1}}-\sqrt{\frac{R_2C_2}{R_1C_1}}(\beta-1)$	$\frac{1}{\sqrt{r\rho}}-\sqrt{\frac{r}{\rho}}\cdot(\beta-1)$
C_2	$\sqrt{\frac{R_1C_1}{R_2C_2}}$	$\sqrt{\frac{\rho}{r}}$

Unlike the *amplitude-to-coefficient sensitivities*, the *coefficient-to-component sensitivities* $S_x^{a_i}$, shown in Table 1, where x represents each of the component types, are dependent on the realization of the filter circuit and can be reduced by non-standard filter design as shown in [1].

3. DESIGN OF SECOND-ORDER FILTERS

Consider a 2nd-order HP filter shown in Figure 1(a) [4], [5]. This circuit is dual to the 2nd-order LP filter presented in [1]. The voltage transfer function $T(s)$ for this circuit is given by

$$T(s)=\frac{V_2}{V_1}=\frac{N(s)}{D(s)}=\frac{Ks^2}{s^2+a_1s+a_0}=\frac{Ks^2}{s^2+(\omega_p/q_p)\cdot s+\omega_p^2} \quad (7)$$

where the coefficients a_i are shown in Table 2. The voltage gain $\beta=1+R_F/R_G$ is obtained with an ideal non-inverting operational amplifier (OA), i.e. circuits belong to the class 4 [4]. The sensitivity of a_0 to all RC components is –1 (and to the gain β it is zero), thus $\Delta a_0/a_0$ can be decreased only by decreasing the tolerances of R_1, R_2, C_1 and C_2. This is also true for all the class-4 filters [1]. The sensitivity expressions of a_1 to the tolerance of passive components, are given in the first column of Table 1.

The method for minimizing the sensitivity of the coefficient a_1 with respect to β, for class-4 circuits is shown in [1]. We obtain

$$S_\beta^{a_1}=-S_\beta^{q_p}=-\left(\frac{q_p}{\hat{q}}-1\right) \quad (8)$$

where we denote the pole Q of the passive sub-network by $\hat{q}$. The coefficient sensitivities are all proportional to q_p. Thus, one does well to select the filter type with the lowest pole Qs for a given application. From (8) it follows that the coefficient a_1 sensitivity to the gain is inversely proportional to the pole Q factor of the passive network $\hat{q}$, which is less than 0.5 [3]. The value of $\hat{q}$ can be maximized by appropriately impedance scaling individual sections of an RC-network. This is referred to as "impedance tapering" in [1]. Referring to Figure 1(a), for our circuit this is accomplished when the second RC-section in the feedback loop comprising R_2 and C_2 (inside the rectangle) is impedance scaled upwards in order to minimize the loading on the first, i.e. R_1 and C_1. Letting

$$R_1=R;\quad C_1=C;\quad R_2=rR;\quad C_2=C/\rho \quad (9)$$

we obtain the sensitivity relations given in the second column of Table 1, and from the expression for pole Q, q_p it follows that:

$$\hat{q}=\left.\frac{\sqrt{r\rho}}{1+r+\rho}\right|_{r=\rho}=\left.\frac{\rho}{1+2\rho}\right|_{\rho\to\infty}=0.5 \quad (10)$$

Thus, impedance scaling R_2 and C_2 as in (9), $\hat{q}$ will approach 0.5 and the sensitivity of a_1 to β will be minimized according to (8). A glance at the sensitivities in the second column of Table 1, shows that some of them are proportional to ρ and r and some to ρ^{-1} and r^{-1}. Setting ρ=1 provides a useful compromise, whereby, of course, r>1. Note that $S_\beta^{a_1}=-S_\beta^{q_p}$.

Consider the four different realisations of the second-order BP filter circuits shown in Figure 1(c)-(f). One can distinguish between two basic topologies, i.e. the type A circuit in Figure 1(c) and the type B circuit shown in Figure 1(d). The circuits in Figure 1(e), (f) are dual to the circuits (c) and (d), respectively. It can readily be shown, that dual filters of types $\overline{\mathrm{A}}$ and $\overline{\mathrm{B}}$ have similar characteristics, in the sense of sensitivity, therefore A and B, will not be considered in this work. Note that in order to minimize (8), we have to increase the impedance of the first section of BP filter type A. For simplicity we denote the two input resistors as

$$R_1=\xi_1R_p;\ R_2=\xi_2R_p;\ R_p=R_1||R_2. \quad (11)$$

Design equations for the tapered second-order HP filter follow. With the tapering factors in (9) and with

$$\omega_0=(RC)^{-1} \quad (12)$$

we obtain for the coefficients of $T(s)$

$$a_0=\frac{\rho\omega_0^2}{r},\ a_1=\omega_0\left[\frac{\rho+1}{r}-\beta+1\right],\ \beta=\frac{\rho+1}{r}-\frac{1}{q_p}\sqrt{\frac{\rho}{r}}+1 \quad (13)$$

$$r=\frac{\omega_0^2}{\omega_0^2(\beta-1)+a_1\omega_0-a_0}\qquad \rho=\frac{ra_0}{\omega_0^2}=\frac{a_0}{\omega_0^2(\beta-1)+a_1\omega_0-a_0} \quad (14)$$

From $a_0=\omega_p^2$ and $a_1=\omega_p/q_p$, which are given by the filter specifications, we must determine ω_0, ρ, r and β. Parameters r and ρ must both be positive, and β must be larger than unity. This leads to the following realizability constraints.

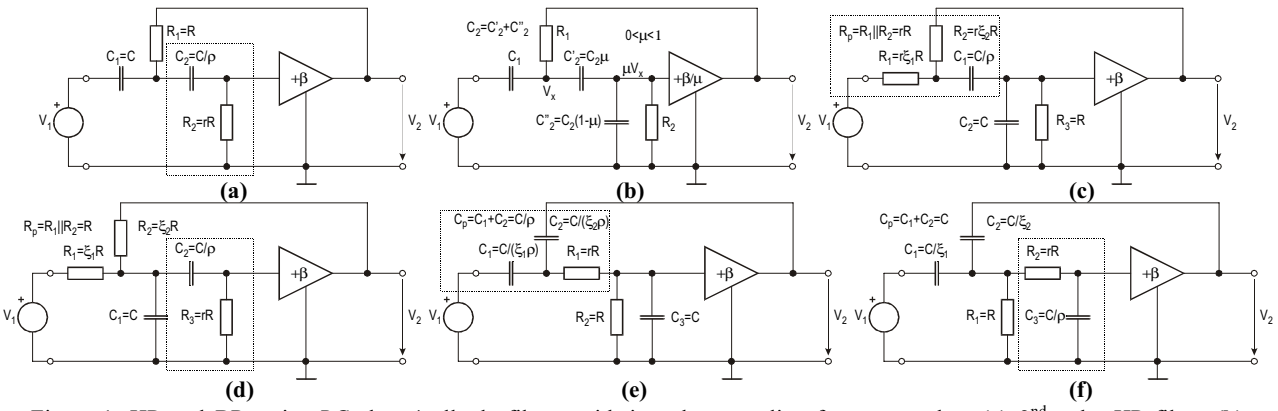

Figure 1. HP and BP active-RC class-4 allpole filters, with impedance scaling factors r and ρ. **(a)** 2nd-order HP filter. **(b)** Ensuring β≥1. **(c)-(f)** 2nd-order BP filters: **(c)** Type A. **(d)** Type B. **(e)** Type $\overline{\mathrm{A}}$. **(f)** Type $\overline{\mathrm{B}}$.

Table 2 The second-order filter coefficients in terms of component values and GSP equations.

Type	$a_0=\omega_p^2$	$a_1=\omega_p/q_p$	$N(s)$	r (min. GSP)	GSP
HP	$\dfrac{1}{R_1R_2C_1C_2}$	$\dfrac{R_1(C_1+C_2)+R_2C_2-\beta R_2C_2}{R_1R_2C_1C_2}$	$\beta\dfrac{1}{R_1R_2C_1C_2}s^2$	$\dfrac{\rho}{4q_p^2}\left[\sqrt{1+12q_p^2\left(1+\rho^{-1}\right)}-1\right]^2$	$q_p\beta^2\sqrt{\dfrac{r}{\rho}}$
BP-A	$\dfrac{R_1+R_2}{R_1R_2R_3C_1C_2}$	$\dfrac{(R_1+R_2)R_3(C_1+C_2)+R_1R_2C_1-\beta R_1R_3C_1}{R_1R_2R_3C_1C_2}$	$\beta\dfrac{1}{R_1C_2}s$	$\dfrac{\rho}{36q_p^2}\left[\sqrt{1+12q_p^2\left(1+\rho^{-1}\right)}+1\right]^2$	$q_p\dfrac{\beta^2}{\xi_2}\dfrac{1}{\sqrt{r\rho}}$
BP-B	$\dfrac{R_1+R_2}{R_1R_2R_3C_1C_2}$	$\dfrac{R_1R_2C_1+(R_1R_2+R_1R_3+R_2R_3)C_2-\beta R_1R_3C_2}{R_1R_2R_3C_1C_2}$	$\beta\dfrac{1}{R_1C_1}s$	$\dfrac{\rho}{4q_p^2}\left[\sqrt{1+12q_p^2\left(1+\rho^{-1}\right)}-1\right]^2$	$q_p\dfrac{\beta^2}{\xi_2}\sqrt{\dfrac{r}{\rho}}$

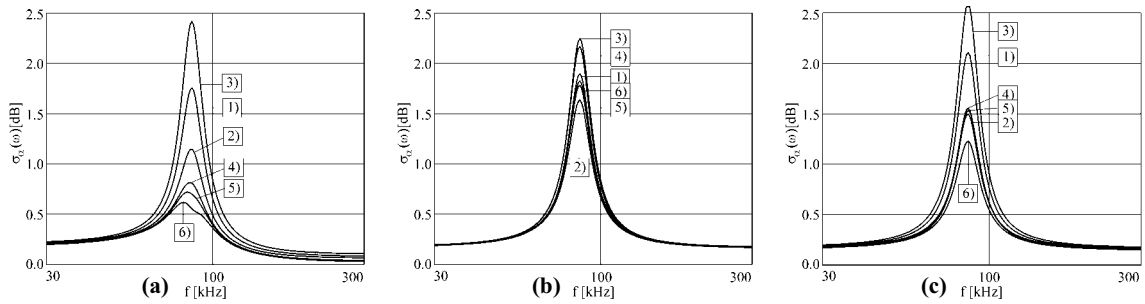

Figure 2. Sensitivities of 2nd-order filter circuits. **(a)** HP. **(b)** BP type A. **(c)** BP type B.

3.1 Realizability constraints

In order to obtain positive values for r and ρ in (14) for the HP filter, the design frequency must satisfy the following constraint

$$\omega_0 > -\frac{a_1}{2(\beta-1)}+\sqrt{\left(\frac{a_1}{2(\beta-1)}\right)^2+\frac{a_0}{(\beta-1)}}\,. \qquad (15)$$

Because $\beta\geq1$, the expression under the square root is always positive. From (14) it follows that constraint (15) is automatically satisfied, since r, $\rho>0$. Thus, this constraint does not need to be checked. Similar realizability constraints for the values of r and ρ of BP filters can be derived as well. They are also automatically satisfied. Furthermore, to ensure that $\beta\geq1$, with the chosen capacitive tapering factor ρ for the HP filter, we have an upper bound on the resistive tapering factor r, i.e.

$$r\leq r_\beta=q_p^2(1+\rho)^2/\rho\,. \qquad (16)$$

The constraint (16) needs to be checked for. For the BP filter type B the constraint to ensure that $\beta\geq1$ is not a limitation, because we have the feedback attenuation factor ξ_1. If (16) is satisfied, we have the case *i*) $1<\xi_2<\beta$, and if not, then we have *ii*) $\beta<\xi_2$. In the latter case, we can choose r, i.e. $r_\beta<r<r_{max}$ to obtain $\beta\geq1$. The upper bound r_{max} is dependent on the choice of ρ and ξ_1 and is given by:

$$r_{\max}=-\xi_1\left[\left(1+\rho-\frac{\rho\xi_1}{2q_p^2}\right)+\sqrt{\left(1+\rho-\frac{\rho\xi_1}{2q_p^2}\right)^2-(\rho+1)^2}\right],\ \rho<\rho_\Delta;$$

$$r_{\max}=\infty,\ \ \rho>\rho_\Delta;\ \text{ where } \rho_\Delta=(\xi_1/4q_p^2-1)^{-1} \qquad (17)$$

If, for any reason, we require that $\beta<1$, we can substitute capacitance C_2 by a capacitive voltage divider with a factor $0<\mu<1$, as shown in Figure 1(b). Then the needed amplifier gain β/μ will be greater than or equal to unity. In the case of a LP circuit, the same is possible by substituting R_2 with a resistive voltage divider resulting in a voltage reduction by a factor μ. The disadvantage is that we need one more component, thus a better solution is to select the appropriate tapering factors r, ρ (and ξ_1) to obtain $\beta\geq1$. The BP filter type A has no constraints, because of its topology.

3.2 Example

Consider the following practical example. Suppose that

$$\omega_p=2\pi\cdot86\,\text{kHz};\ \ q_p=5;\ \ C=500\,\text{pF}. \qquad (18)$$

The design procedure for a HP filter can be accomplished by the following step-by-step procedure.

i) Select r and ρ and calculate ω_0 and β: Let $\rho=1$ and $r=4$, thus from (18) we have

$$\omega_0=(RC)^{-1}=\omega_p\sqrt{r/\rho}=2\pi\cdot86\cdot10^3\sqrt{4}=1080.7\cdot10^3\ \text{rad/s}.$$

$$\beta_{LP}=1+(1+\rho)/r-1/q_p\cdot\sqrt{\rho/r}=1.4\,.$$

In this step we check the constraints for $\beta\geq1$, and if it is not satisfied we choose another r and ρ. Note that we can select ρ and then calculate r for min. GSP, using the equations in Table 2.

ii) Select C_1 and compute R_1, R_2, and C_2: Let C=500pF, thus $R=(\omega_0C)^{-1}$=1850.6Ω. Then $R_1=R$=1850.6Ω, $C_1=C$=500pF, $C_2=C/\rho$=500pF, $R_2=rR$=7.4kΩ.

iii) Select R_G and calculate R_F: Let R_G=10kΩ, then

$R_F=R_G(\beta-1)$=10kΩ·(1.4-1)=4kΩ (Filter Nr. 4 in Table 3).

The design procedure for BP filters can be accomplished by the same procedure, with just a few differences. For a BP type B

filter we use the appropriate equations in step *i*) $\beta_{BP\text{-}B}=\xi_1\cdot\beta_{LP}$, and in step *ii*) $R_1=\xi_1 R$, $R_2=\xi_2 R$, $\xi_2=\xi_1/(\xi_1-1)$, $R_3=rR$, $C_1=C$, $C_2=C/\rho$. For BP type A filter we use in *i*) $\beta_{BP-A}=\xi_2\left[1+r+\rho-1/q_p\cdot\sqrt{\rho r}\right]$ and in *ii*) $R_1=\xi_1 rR$, $R_2=\xi_2 rR$, $\xi_2=\xi_1/(\xi_1-1)$, $R_3=R$, $C_1=C/\rho$, $C_2=C$.

In the design process, various methods of impedance tapering have been applied and the resulting component values are presented in Tables 4, 5 and 6. The corresponding Schoeffler sensitivities are shown in Figure 2. A sensitivity analysis was performed assuming the relative changes of the resistors and capacitors to be uncorrelated random variables, with a zero-mean and 1% standard deviation. The standard deviation (which is related to the Shoeffler sensitivities) of the variation of the logarithmic gain $\Delta\alpha=8.68588\ \Delta|T_{BP}(\omega)|/|T_{BP}(\omega)|$, with respect to the passive elements, is calculated for the filter examples in Table 3 and shown in Figure 2(a), for the HP filter case. Monte Carlo runs (using PSPICE simulation) were performed as a double-check. We present the corresponding standard deviation $\sigma_\alpha(\omega_p)$ in [dB] of the filter's magnitude obtained using Monte Carlo runs at pole frequency ω_p, in the last columns of Tables 4, 5, and 6, together with filter component values. The pole frequency ω_p is suitable for observing the magnitude spread, because the spread is the highest in the vicinity of this frequency.

From Figure 2(a) we can conclude that the ideally impedance-tapered filter (No. 2) has considerably decreased sensitivities, compared to the non-tapered standard circuit version (No. 1). By tapering only the resistors, while keeping the capacitor values equal (No. 4), the filter sensitivities are decreased even more.

Table 3 Component values of 2nd-order HP filters (resistors in [kΩ], capacitors in [pF], σ_α (ω_p) in [dB]).

Nr.	Filter	R_1	r	C_1	ρ	β	GSP	σ_α
1)	Non Tapered	3.7	1	500	1	2.8	39.2	3.36
2)	Impedance Tapered	3.7	4	500	4	2.05	21.0	1.99
3)	Part. Tapered (r=1)	7.4	1	500	4	5.6	78.4	1.38
4)	Part. Tapered (ρ=1)	1.85	4	500	1	1.4	19.6	4.80
5)	ρ=1 and min. GSP	1.57	5.53	500	1	1.28	19.2	1.19
6)	C-Taper, min. GSP	2.01	13.52	500	4	1.26	14.6	0.93

Table 4 Component values of 2nd-order BP-A filter (resistors in [kΩ], capacitors in [pF], $\sigma_\alpha(\omega_p)$ in [dB]).

Nr.	Filter	R_3	ξ_1	r	C_2	ρ	β	GSP	σ_α
1)	Non Tapered	3.7	2	1	500	1	5.6	78.4	4.34
2)	Impedance Tapered	3.7	2	4	500	4	16.4	168	3.21
3)	Part. Tapered (r=1)	7.4	2	1	500	4	11.2	157	4.85
4)	Part. Tapered (ρ=1)	1.85	2	4	500	1	11.2	157	4.71
5)	C-Taper, min. GSP	5.44	2	1.85	500	4	12.6	146	3.63
6)	R-Taper, min. GSP	10	2	4	126	1.85	12.6	146	3.80

Table 5 Component values of 2nd-order BP-B filter (resistors in [kΩ], capacitors in [pF], $\sigma_\alpha(\omega_p)$ in [dB]).

Nr.	Filter	R_1	ξ_1	r	C_1	ρ	β	GSP	σ_α
1)	Non Tapered	3.7	2	1	500	1	5.6	78.4	4.46
2)	Impedance Tapered	3.7	2	4	500	4	4.1	42.0	2.83
3)	Part. Tapered (r=1)	7.4	2	1	500	4	11.2	165	5.37
4)	Part. Tapered (ρ=1)	1.85	2	4	500	1	2.8	39.2	3.12
5)	ρ=1 and min. GSP	1.57	2	5.53	500	1	2.55	38.3	3.16
6)	C-Taper, min. GSP	2.01	2	13.52	500	4	2.52	29.2	2.3

The resistively tapered filter (No. 3) has the highest sensitivities. Furthermore, the filters with equal capacitors and min. GSP (Nr. 5) and C-tapered and min. GSP (Nr. 6) show somewhat lower sensitivities.

In summary, for the general second-order allpole HP filter of Figure 1(a), resistive impedance tapering with equal capacitors (ρ=1), or capacitor values selected for GSP-minimization, provide circuits with minimum sensitivity.

Observing the standard deviation $\sigma_\alpha(\omega)$[dB] Figure 2(b) and (c) we conclude that the ideally impedance-tapered filter (No. 2) has considerably decreased sensitivities, compared to the non-tapered standard circuit version (No. 1), for both type A and B BP circuits, for the reason explained in [6]. In [6] the so-called "lossy" LP to BP transformation is applied to the 1st-order LP filter, to obtain 2nd-order BP filter type A, as in Figure 1(c). It was shown there that the minimum sensitivity is obtained when r=ρ. Furthermore, from Figure 2 the topology B is shown to be slightly less sensitive than topology A, and can be even more desensitized by minimizing the GSP while tapering the capacitors [see (No. 6) in Figure 2(c)].

In summary, for the general second-order allpole BP filters of Figure 1(c) and (d), ideal impedance tapering (ρ=r), provides circuits with minimum sensitivity.

4. CONCLUSIONS

In this paper, design equations and realizability constraints for second-order HP and BP filters are presented. A procedure for the design of low-sensitivity active *RC* allpole filters of second-order was published earlier in [1]. Instead of standard design methods, as given in various design handbooks, the component values are calculated using "impedance tapering". Capacitive impedance tapering with equal resistors (r=1) provides HP circuits with minimum sensitivity to the component tolerances. This is dual to the LP filter case, as shown in [1], where resistive impedance tapering with equal capacitors (ρ=1) provides minimum sensitivity circuits. In both cases it is preferable to minimize the GSP-product wherever possible. On the other hand, for the BP circuits, ideal impedance tapering (ρ=r) shows the best results. For these, the topology B is slightly better than topology A.

5. REFERENCES

[1] G. S. Moschytz, "Low-Sensitivity, Low-Power, Active-RC Allpole Filters Using Impedance Tapering," IEEE Trans. on Circuits and Systems, vol. CAS-46, no. 8, pp. 1009-1026, Aug. 1999.

[2] R. P. Sallen and E. L. Key, "A practical Method of Designing *RC* Active Filters," IRE Trans.on Circuit Theory, vol. CT-2, pp. 78-85, 1955.

[3] G. S. Moschytz, *Linear Integrated Networks: Fundamentals*. New York (Bell Laboratories Series): Van Nostrad Reinhold Co., 1974.

[4] G. S. Moschytz, *Linear Integrated Networks: Design*. New York (Bell Labs Series): Van Nostrad Reinhold Co., 1975.

[5] G. S. Moschytz and P. Horn, *Active Filter Design Handbook*. Chichester, U.K.: Wiley 1981.

[6] D. Jurišić and N. Mijat, "*Use of "Lossy" LP-BP-Transformation in Active Second-order BP Filter Design Procedure*," in Proc. of ISPA 2001, (Pula, Croatia), pp. 491-495, June 19-21, 2001.